Panasonic

No. SX-DSV03455

TECHNICAL REFERENCE

– Functional Specification –

MODEL

Product Name : AC Servo Driver

Product No. : MINAS A6 Multi series

(EtherCAT communication/rotation type)

Issued on
Jun. 16, 2020
Revised on
Feb. 15, 2021

Industrial Device Solution Business Unit, Industrial Device Business Division,
Industrial Solutions Company, Panasonic Corporation

7-1-1 Morofuku, Daito-City, Osaka 574-0044, Japan
Phone : +81-72-871-1212
Fax : +81-72-870-3151

R2.0

この英文仕様書は、原本である和文仕様書を元にパナソニック株式会社 産業デバイス
ソリューションビジネスユニットが翻訳・発行するものです。
翻訳は，原本の利用に際して一応の参考となるように便宜的に仮訳したものであり、
公的な校閲を受けたものではありません。
英語訳のみを使用して生じた不都合な事態に関しては，当社は一切責任を負うものでは
ありません。和文仕様書のみが有効です。

パナソニック株式会社 インダストリアルソリューションズ社
産業デバイス事業部 産業デバイスソリューションビジネスユニット

This English specification is made and published by Industrial Device Solution Business Unit, Panasonic Corporation based on the original Japanese specification.
Translation is provided unofficially only for the sake of convenience of utilizing the original Japanese specification as a measure of reference. It is not officially reviewed.
Industrial Device Solution Business Unit, Panasonic Corporation is not liable for any disadvantages caused by utilizing only English specification.
Only the Japanese specification is effective.

Industrial Device Solution Business Unit, Industrial Device Business Division,
Industrial Solutions Company, Panasonic Corporation

Revisions

Date	Page	Rev.	Description	Signed
Jun. 16, 2020	-	1.7	NEWLY ISSUED	-
Feb. 15, 2021	1-3,1-5	2.0	・DM Software version up CPU1 Ver1.01→Ver1.02 CPU2 Ver1.01→Ver1.02 PSM Software version up CPU Ver1.01→Ver1.02	-
	1-5,1-12,1-15, 1-17,7-18,7-34, 11-2,11-8,11-10, 11-15,11-16, 11-17,11-18		・Function addition “PSM main power supply overload warning / alarm”	
	1-5,1-15,1-17, 7-32,7-34,7-35, 9-11,11-17		・Function addition “PSM rated output power overload warning”	
	1-5,1-17,7-33 7-34,7-35,11-17, 11-18		・Function addition “PSM alarm mask”	
	1-5		・Function addition “PSM alarm history expantion”	
	8-17		・Addition Added the drive module processing when the safety part transitions to the STO state.	
	1-4,1-7,1-13~17, 7-33		・Correction Correction errors	

Note: The page number (Page) is the current page number at the time of revision.

Table of contents

1. Introduction 1-1

1.1 Introduction 1-2

1.2 Basic specification 1-7

1.3 Function (Position control) 1-8

1.4 Function (Velocity control) 1-9

1.5 Function (Torque control) 1-10

1.6 Function (Full-closed control) 1-11

1.7 Function (Common) 1-12

1.8 Differences from MINAS A6B series 1-13

2. Interface Specifications 2-1

2.1 I/O connector input signal 2-2

2.2 I/O connector output signal 2-4

2.3 I/O connector other signal 2-8

2.3.1 Position comparison output signal 2-8

2.3.2 Other signals 2-8

2.4 I/O signal allocation function 2-9

2.4.1 Input signal allocation 2-9

2.4.1.1 Using with the default setting 2-9

2.4.1.2 Reallocation of input signal 2-10

2.4.2 Output signal allocation 2-15

2.4.2.1 Using the default setting 2-15

2.4.2.2 Reallocation of input signal 2-16

2.5 Mechanical brake output 2-18

3. Front Panel Specifications 3-1

3.1 Front panel configuration 3-2

3.2 Node address setup in Inter-module communication 3-3

3.3 EtherCAT Station alias 3-4

3.4 EtherCAT Indicators 3-5

3.5 7-segment LED display 3-7
3.5.1 Station alias display mode 3-8
3.5.2 Driver information display mode.... 3-8
3.5.3 Safety information display mode 3-11

4. Basic Functions 4-1

4.1 Rotational direction setup....4-2

4.2 Position control 4-3
4.2.1 Process of command pulse input 4-3
4.2.2 Electronic gear function.... 4-4
4.2.3 Positional command filtering function.... 4-8
4.2.4 Positioning complete output (INP/INP2) function 4-10
4.2.5 Pulse regeneration function (Not supported) 4-12

4.3 Velocity control 4-13
4.3.1 Attained speed output (AT-SPEED).... 4-14
4.3.2 Speed coincidence output (V-COIN).... 4-14
4.3.3 Velocity command acceleration/deceleration setting function 4-15

4.4 Torque control....4-17
4.4.1 Speed limit function 4-18

4.5 Full-closed control....4-19
4.5.1 Selection of external scale type 4-20
4.5.2 Setting of external scale division ratio.... 4-21
4.5.3 Setting of hybrid deviation excess.... 4-22
4.5.4 Full-closed control function (Rotary scale) (Not supported).... 4-23

4.6 Setting regenerative resistor 4-24

4.7 Absolute setup 4-25
4.7.1 Absolute encoder 4-25
4.7.2 External scale.... 4-27

4.8 External scale position information monitor function (Not supported) 4-28

5. Auto Tuning Functions 5-1

5.1 Automatic adjusting function 5-2
5.1.1 Real-time auto tuning 5-2
5.1.2 Adaptive filter.... 5-10
5.1.3 Real-time auto tuning (Two-degree-of-freedom control mode standard type).... 5-12
5.1.4 Real-time auto tuning (Two-degree-of-freedom control mode synchronization type). 5-19

5.2 Manual adjusting function 5-26
5.2.1 Block diagram of position control mode 5-27

5.2.2 Block diagram of velocity control mode 5-28
5.2.3 Block diagram of torque control mode 5-29
5.2.4 Block diagram of full-closed control mode 5-30
5.2.5 Gain switching function 5-31
5.2.6 Notch filter 5-36
5.2.7 Damping control 5-38
5.2.8 Model-type damping filter (Not supported) 5-43
5.2.9 Feed forward function 5-44
5.2.10 Load variation suppression function 5-48
5.2.11 3rd gain switching function 5-51
5.2.12 Friction torque compensation 5-52
5.2.13 Hybrid vibration damping function 5-54
5.2.14 Two-stage torque filter 5-55
5.2.15 Quadrant projection suppression function 5-56
5.2.16 Two-degree-of-freedom control mode (with position control) 5-58
5.2.17 Two-degree-of-freedom control mode (with velocity control) 5-61
5.2.18 Two-degree-of-freedom control mode (with full-closed control) 5-63
5.2.19 Two-degree-of-freedom control mode (with torque control) 5-66
5.2.20 High response current control 5-66

6. Application Functions 6-1

6.1 Torque limit switching function 6-2

6.2 Motor working range setup function 6-3

6.3 Deceleration stop sequence 6-5
6.3.1 Sequence upon inputting of over-travel inhibition (POT, NOT) 6-5
6.3.2 Sequence at servo-off 6-9
6.3.3 Sequence at main power OFF 6-10
6.3.4 Sequence at alarm 6-12
6.3.5 Emergency stop upon occurrence of alarm 6-13
6.3.6 Fall prevention function in the event of alarms/servo-ON 6-15
6.3.6.1 Fall prevention function in the event of alarms 6-15
6.3.6.2 Fall prevention function in the event of servo-ON 6-16
6.3.7 Slow stop function 6-17

6.4 Torque saturation protection function 6-20

6.5 Position comparison output function 6-21

6.6 Single-turn absolute function 6-25

6.7 Infinitely rotation absolute function 6-28

6.8 Deterioration diagnosis warning function 6-32

6.9 Retracting operation function (Not supported) 6-35

6.10 Backlash correction function (Not supported) 6-36

7. Protective Functions 7-1

7.1 List of protective function 7-2

7.2 Details of protective function 7-6

7.2.1 Overload protection time characteristics 7-28

7.3 Warning function 7-32

7.4 Setup of gain pre-adjustment protection 7-36

7.5 About the protection function setting for homing return by using the Z phase 7-38

8. Advanced Safety Functions 8-1

8.1 Advanced safety functions 8-2

8.2 System configuration 8-3

8.2.1 Encoder configuration 8-3

8.3 Safety input and output signals 8-4

8.3.1 Safety input 8-4

8.3.2 Safety output 8-4

8.3.3 Testpulse outputs 8-4

8.4 Connection example 8-5

8.4.1 Safety input (for source output connection) 8-5

8.4.2 Safety input(for sink output connection) 8-7

8.4.3 Safety output 8-8

8.4.4 Brake output 8-8

8.5 Details of safety functions 8-9

8.5.1 Safety functions 8-9

8.5.2 Optional functions 8-12

8.5.3 Details of Safe Torque Off (STO) 8-13

8.5.3.1 Change point from MINAS-A5 series 8-13

8.5.3.2 Outline of safe torque off (STO) function 8-13

8.5.3.3 Activation to STO state, timing diagram 8-14

8.5.3.4 Return timing diagram from STO state 8-15

8.5.3.5 Connection example 8-15

8.6 PANATERM for Safety 8-16

8.7 The operation of the driver module 8-17

8.7.1 Safety STO status 8-17

8.7.2 Safety fatal error status 8-17
8.7.3 EtherCAT object to check the safety status 8-18
8.8 Alarm clearing for safety monitoring 8-19
8.9 Safety precautions 8-20

9. List of Parameters 9-1

9.1 List of parameters 9-2
9.1.1 Class 0: Basic setting 9-2
9.1.2 Class 1: Gain adjustment 9-4
9.1.3 Class 2: Damping control 9-6
9.1.4 Class 3: Velocity/ Torque/ Full-closed control 9-9
9.1.5 Class 4: I/O monitor setting 9-10
9.1.6 Class 5: Enhancing setting 9-14
9.1.7 Class 6: Special setting 9-20
9.1.8 Class 7: Special setting2 9-28
9.1.9 Class 8: Special setting3 9-34
9.1.10 Class 9: Linear 9-35
9.1.11 Class 15: For manufacturer's use 9-36

10. Timing Chart 10-1

10.1 Servo drive system startup timing diagram on control power-up 10-2
10.2 Driver module servo-ON/OFF action while the motor is at stall (servo-lock) 10-4
10.3 Driver module servo-ON/OFF action while the motor is in motion 10-5
10.4 Driver module when an alarm has occurred (at dynamic brake/free-run stop) 10-6
10.5 Driver module when an alarm has occurred (at emergency stop) 10-7
10.6 Driver module when an alarm has been cleared 10-9

11. Power Supply Module 11-1

11.1 Basic specifications 11-2
11.2 Interface specifications 11-3
11.2.1 Connector for Inter-module communication 11-3
11.2.2 External device input signal connector 11-5
11.2.3 Contactor control output connector 11-6
11.3 Front panel 11-7
11.3.1 Front panel configuration 11-7
11.4 Basic functions 11-8

11.4.1 Basic block diagram 11-8
11.4.2 Regenerative control function 11-9
11.4.3 Main power off detection function 11-9
11.5 Protective functions 11-10
11.5.1 List of protective functions 11-10
11.5.2 Details of protective functions 11-11
11.5.3 Warning functions 11-17
11.6 List of power supply module parameters 11-18

(Blank page)

1

Introduction

1.1 Introduction

This document describes the functions of the servo drive system MINAS A6 Multi series.
The MINAS A6 Multi series consists of one power supply module (PSM) and up to 20 driver modules (DM) up to the maximum number of connections.

One driver module can control motors of 2 axes (Axis A, Axis B) or 1 axis (Axis A only).

Chapters 1 to 10 of this document describe the basic functional specifications of the driver module. Advanced safety function built into the driver module is explained in Chapter "8 Advanced Safety Function".
The power supply module specifications are described in Chapter "11 Power Supply Module".

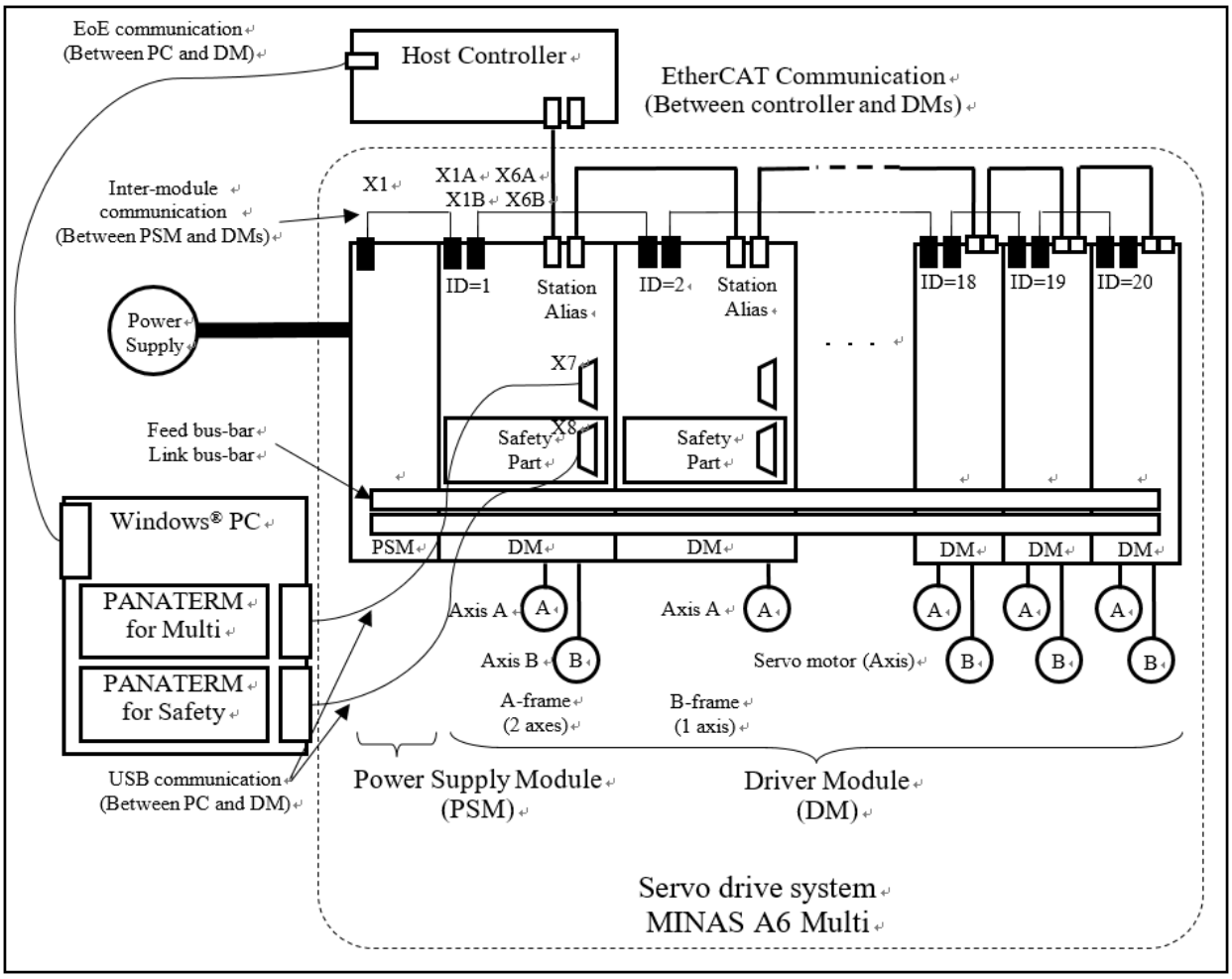

* Windows® is a registered trademark of Microsoft Corporation in the United States and other countries.

MINAS A6 Multi series Functional comparison

In this software version, the functions of "✕" are not supported in the table below.
The description regarding these functions in the body text may be subject to change without prior notice at handling, hereafter.

✓:Usable ✕:Not usable

Function			Product	
			MINAS A6BF (Multi-function type)	**MINAS A6 Multi**
			Product number ending with:F CPU1:Ver1.05 CPU2:Ver1.05	<Power supply module> CPU:Ver1.02 <Drive module> CPU1:Ver1.02 CPU2:Ver1.02 (A axis and B axis are the same.)
Control mode				
	Position control	pp	✓	✓
		csp	✓	✓
		ip	✕	✕
		hm	✓	✓
	Velocity control	pv	✓	✓
		csv	✓	✓
	Torque control	tq	✓	✓
		cst	✓	✓
		cstca	✕	✕
	Full-closed control	-	✓	✓
		Rotary scale	✓	✕
Function				
	Two-degree-of-freedom control	Position	✓	✓
		Velocity	✓	✓
		Torque (Note 1)	✓	✓
		Full-closed	✓	✓
	Safety function (STO)		✓	✓
	Advanced safety function		✕	✓
	Pulse regeneration function		✓	✕
	Damping Control		✓	✓
	Model-type damping filter		✓	✕
	Feed forward function		✓	✓
	Load variation suppression function		✓	✓
	3rd gain switching function		✓	✓
	Friction torque compensation		✓	✓
	Hybrid vibration damping function		✓	✓
	Quadrant projection suppression function		✓	✓
	Torque limit switching function		✓	✓
	Motor working range setting function		✓	✓
	Torque saturation protection function		✓	✓
	Single-turn absolute function		✓	✓
	Infinitely rotation absolute function		✓	✓
	Retracting operation function		✓	✕
	Backlash compensation function		✓	✕

(Note 1) Not supported in the synchronous type of 2 degrees of freedom (DOF) control mode.

(To be continued)

Function		MINAS A6BF (Multi-function type)	MINAS A6 Multi
	External scale position information monitor function under semi-closed control	✓	×
	Slow stop function	✓	✓
	Deterioration diagnosis warning function	✓	✓
	Position comparison output function	✓	✓
	SM2(synchronous with SM2 event)	✓	×
	Input shift time	✓	×
	FoE (File over EtherCAT)	×	×
	Jerk	×	×
	Complete Access of SDO message	×	×
	EoE(Ethernet over EtherCAT)	×	✓
	Battery refreshment	✓	✓

About absolute encoder

There are two types of absolute encoders: a type that holds multi-turn data with a battery for absolute data (hereinafter referred to as an absolute encoder with a battery) and a type that does not require a battery to hold multi-turn data (hereinafter referred to as a battery-less absolute encoder).
The parts that are not specified are functions common to both absolute encoders.

Software version

This technical reference applies to the servo drive system compatible with software of the following version:

- Check the software versions 1 and 2 by 2107h-2Dh (Axis A), 2507h-2Dh (Axis B) (Reference to "EtherCAT communication specification") or setup support software PANATERM for Multi.
- Check the software version 3 by 100Ah (Reference to "EtherCAT communication specification").
- Check the safety CPU1/CPU2 version by 202Ch-01h/02h (Reference to "EtherCAT communication specification") or the safety function setting software PANATERM for Safety.

Software version		Contents of change	Available PANATERM	
			for Multi	for Safety
DM CPU1(Version1)	Ver1.01	First edition.	6.2.0.1 or later	1.7.1.8049 or later
DM CPU2(Version2)	Ver1.01			
DM Manufacture Software(Version3)	Ver1.00			
DM Safety CPU1	Ver1.00			
DM Safety CPU2	Ver1.00			
PSM CPU	Ver1.01			

<table>
<tr><th colspan="2">Software version</th><th>Contents of change</th><th colspan="2">Available PANATERM</th></tr>
<tr><th colspan="2"></th><th></th><th>for Multi</th><th>for Safety</th></tr>
<tr><td>DM CPU1(Version1)</td><td>Ver1.02</td><td rowspan="7">Function extended edition 1
<table>
<tr><th>Additional capability</th><th>Reference</th></tr>
<tr><td>1) PSM main power supply overload warning / alarm</td><td>This document
7.3, 11.1, 11.4.1, 11.5, 11.6
EtherCAT Communication specification
6.9.7</td></tr>
<tr><td>2) PSM rated output power overload warning</td><td>This document
7.3, 11.5.3
EtherCAT Communication specification
6.9.7, 6.9.8, 9</td></tr>
<tr><td>3) PSM alarm mask</td><td>This document
7.3, 11.5.3, 11.6</td></tr>
<tr><td>4) PSM alarm history expantion</td><td>-</td></tr>
</table></td><td rowspan="7">6.2.1.1 or later</td><td rowspan="7">1.7.1.8049 or later</td></tr>
<tr><td>DM CPU2(Version2)</td><td>Ver1.02</td></tr>
<tr><td>DM Manufacture Software(Version3)</td><td>Ver1.00</td></tr>
<tr><td>DM Safety CPU1</td><td>Ver1.00</td></tr>
<tr><td>DM Safety CPU2</td><td>Ver1.00</td></tr>
<tr><td>PSM CPU</td><td>Ver1.02</td></tr>
</table>

■ Related TECHNICAL REFERENCE

- These reference specifications describe hardware specifications, Safety Precautions, Network Security, Warranty etc.
  Please be sure to read carefully, after understanding the contents, refer to this specification.

SX-DSV03452	REFERENCE SPECIFICATIONS Power supply module section
SX-DSV03454	REFERENCE SPECIFICATIONS Drive module section

- This technical reference describes the EtherCAT communication specifications between the host controller and each driver modules.

SX-DSV03456	TECHNICAL REFERENCE EtherCAT Communication Specification

- These manual describe the details of the advanced safety function and how to use the safety function setting software PANATERM for Safety.

SX-DSV03508	PANATERM for Safety Programming Manual
SX-DSV03514	Safety Installation Manual

For the setup support software PANATERM for Multi, refer to the operation manual installed with the software.

CAUTION

- All rights reserved. No part of this publication may be reproduced or transmitted in any form without prior permission.
- Industrial Device Solution Business Unit, Panasonic Corp. reserves the right to make modifications and improvements to its products and/or documentation, including specifications and software, without prior notice.
- See the "REFERENCE SPECIFICATIONS Power supply module section (SX-DSV03452)" and "REFERENCE SPECIFICATIONS Driver module section (SX-DSV03454)" for the shipment setting value of the series.
- Driver module of MINAS A6 Multi (A-frame) can control motors of up to two axes with one driver module, and has two encoder connectors, two external scale connectors, and two motor connectors. Using the product with an incorrect connection of the encoder cable, external scale cable, or motor cable may result in malfunction or failure in the driver module or servo motor. Be sure to check that the connections of the encoder, external scale and servo motor are correct before turning on the power supply.
- The MINAS A6 Multi series may not be fully compatible with the A6B series.
- See the "REFERENCE SPECIFICATIONS Power supply module section (SX-DSV03452)" and "REFERENCE SPECIFICATIONS Driver module section (SX-DSV03454)" for the product number of driver module that passed the EtherCAT Conformance Test.

EtherCAT® is registered trademark and patented technology, licensed by Beckhoff Automation GmbH, Germany.

EtherCAT® Conformance tested

1.2 Basic specification

<table>
<tr><th colspan="3">Item</th><th>Contents</th></tr>
<tr><td colspan="3">Control method</td><td>IGBT PWM sinusoidal wave drive</td></tr>
<tr><td colspan="3">Control mode</td><td>Semi-closed control
<table>
<tr><th></th><th colspan="2">Modes of operation</th></tr>
<tr><td rowspan="3">Position control</td><td>pp</td><td>Profile position mode</td></tr>
<tr><td>csp</td><td>Cyclic synchronous position mode</td></tr>
<tr><td>hm</td><td>Homing mode</td></tr>
<tr><td rowspan="2">Velocity control</td><td>pv</td><td>Profile velocity mode</td></tr>
<tr><td>csv</td><td>Cyclic synchronous velocity mode</td></tr>
<tr><td rowspan="2">Torque control</td><td>tq</td><td>Torque profile mode</td></tr>
<tr><td>cst</td><td>Cyclic synchronous torque mode</td></tr>
</table>
Full-closed control
<table>
<tr><th></th><th colspan="2">Modes of operation</th></tr>
<tr><td rowspan="3">Position control</td><td>pp</td><td>Profile position mode</td></tr>
<tr><td>csp</td><td>Cyclic synchronous position mode</td></tr>
<tr><td>hm</td><td>Homing mode</td></tr>
</table></td></tr>
<tr><td colspan="3">Encoder feedback</td><td>23-bit (8,388,608 resolution) absolute encoder, with battery, 7-wire serial
23-bit (8,388,608 resolution) battery-less absolute encoder, 5-wire serial</td></tr>
<tr><td colspan="3">External scale feedback (Note 1)</td><td>A/B phase, initialization signal differential input
Manufacturers that support serial communication scale: (Note 1)
- Mitutoyo Corporation
- Heidenhain K.K.
- Renishaw K.K.
- Magnescale Co., Ltd.
- Nidec Sankyo Corporation
- Fagor Automation S.Coop</td></tr>
<tr><td rowspan="2">Control signal</td><td colspan="2">Input</td><td>Each 8 input can be assigned by the parameter.
Distribution of 1 input signal to each axis possible</td></tr>
<tr><td colspan="2">Output</td><td>Each 2 output can be assigned by the parameter.</td></tr>
<tr><td colspan="3">Mechanical brake output</td><td>1 output for each axis (selection between BRK-OFF signal and set brake signal possible with a parameter)</td></tr>
<tr><td rowspan="4">Communication</td><td colspan="2">EtherCAT</td><td>Communication for transmission of a real-time operation command, the parameter setting, or the status monitoring.</td></tr>
<tr><td rowspan="2">USB</td><td>for DM/PSM</td><td>USB interface to connect to computers (setup support software PANATERM for Multi) for DM/PSM parameter setting or status monitoring.
USB cable connection is possible.</td></tr>
<tr><td>for safety</td><td>USB interface to connect to computers (safety function setting software PANATERM for Multi for Safety) for parameter setting or programming safety monitoring program using safe PLC function.</td></tr>
<tr><td colspan="2">Inter-modules</td><td>Communication between driver module and power supply module.</td></tr>
<tr><td colspan="3">Front panel</td><td>1.2 digits 7-segment LED
2.4 EtherCAT Indicators LED (RUN, ERR, L/A IN, L/A OUT)
3.2 rotary switch for station alias setting (ECAT ID)
4.1 push switch for display switching (M)
5.6-digit dip switch for node address setting of inter-modules communication (CROSS ID)</td></tr>
<tr><td colspan="3">Dynamic brake</td><td>Refer to the "REFERENCE SPECIFICATIONS Power supply module section (SX-DSV03452)" and "Driver module section (SX-DSV03454)".</td></tr>
</table>

(Note 1) Please contact us for a corresponding part number.

1.3 Function (Position control)

Item		Contents
Control input		Positive/negative direction over-travel inhibition, External latch signal, Near home position, etc.
Control output		Positioning completion etc.
Position command input	Input mode	EtherCAT command
	Smoothing Filter	Primary delay filter or FIR type filter is adaptable to the command input
Damping control		Available (Up to 3 frequency settings can be used simultaneously.)
Model-type damping filter		Not available
Feed forward function		Available (speed, torque)
Load variation suppression function		Available
3rd gain switching function		Available
Friction torque compensation		Available
Hybrid vibration damping function		Not available
Quadrant projection suppression function		Available
Two-degree-of-freedom control mode		Available (standard type, synchronization type)
Torque limit switching function		Available
Motor working range setting function		Available
Torque saturation protection function		Available
Single-turn absolute function		Available
Infinitely rotation absolute function		Available [Requirement] Encoder resolution (2^{23})/electronic gear ratio/reduction ratio is an integer less than or equal to (2^{31}-1).
External scale position information monitor function under semi-closed control		Not available

1.4 Function (Velocity control)

Item		Contents
Control input		Positive/negative direction over-travel inhibition, External latch signal, etc.
Control output		At speed etc.
Velocity command input	Input mode	EtherCAT command
	Soft start/stop function	0 to 10 [s] / 1000 [r/min]. Acceleration and deceleration can be set separately. S-curve acceleration/deceleration is available.
Soft start/stop function		0 to 10 [s] / 1000 [r/min]. Acceleration and deceleration can be set separately. S-curve acceleration/deceleration is available.
Damping control		Not available
Model-type damping filter		Not available
Feed forward function		Available (torque)
Load variation suppression function		Available
3rd gain switching function		Not available
Friction torque compensation		Available
Hybrid vibration damping function		Not available
Quadrant projection suppression function		Not available
Two-degree-of-freedom control mode		Available (standard type)
Torque limit switching function		Available
Motor working range setting function		Not available
Torque saturation protection function		Available
Single-turn absolute function		Available
Infinitely rotation absolute function		Available [Requirement] Encoder resolution (2^{23})/electronic gear ratio/reduction ratio is an integer less than or equal to (2^{31}-1).
External scale position information monitor function under semi-closed control		Not available

1.5 Function (Torque control)

Item		Contents
Control input		Positive/negative direction over-travel inhibition, External latch signal, etc.
Control output		At-speed etc.
Torque command input	Input mode	EtherCAT command
	Speed limit function	Speed limit value can be Switched by EtherCAT command.
Damping control		Not available
Model-type damping filter		Not available
Feed forward function		Not available
Load variation suppression function		Not available
3rd gain switching function		Not available
Friction torque compensation		Not available
Hybrid vibration damping function		Not available
Quadrant projection suppression function		Not available
Two-degree-of-freedom control mode		Not available
Torque limit switching function		Not available
Motor working range setting function		Not available
Torque saturation protection function		Not available
Single-turn absolute function		Available
Infinitely rotation absolute function		Available [Requirement] Encoder resolution (2^{23})/electronic gear ratio/reduction ratio is an integer less than or equal to (2^{31}-1).
External scale position information monitor function under semi-closed control		Not available

1.6 Function (Full-closed control)

Item		Contents
Control input		Positive/negative direction over-travel inhibition, External latch signal, Near home position, etc.
Control output		Positioning completion etc.
Position command input	Input mode	EtherCAT command
	Smoothing Filter	Primary delay filter or FIR type filter is adaptable to the command input
External scale ratio		1/40 to 125200 times Although the ratio of encoder pulse (numerator) and external scale pulse (denominator) can be set anywhere between the range of 1 and 2^{23} for the numerator and 1 to 2^{23} for the denominator, please use within the range indicated above.
Damping control		Available (Up to 3 frequency settings can be used simultaneously.)
Model-type damping filter		Not available
Feed forward function		Available (speed, torque)
Load variation suppression function		Available
3rd gain switching function		Available
Friction torque compensation		Available
Hybrid vibration damping function		Available
Quadrant projection suppression function		Available
Two-degree-of-freedom control mode		Available (standard type)
Torque limit switching function		Available
Motor working range setting function		Available
Torque saturation protection function		Available
Single-turn absolute function		Not available
Infinitely rotation absolute function		Not available
External scale position information monitor function under semi-closed control		Not available

1.7 Function (Common)

Item	Contents
Electronic gear ratio	Applicable scaling ratio: 1/1000–8000 The electronic gear ratio is limited by the combination of communication cycle, PDO size, and electronic gear ratio. For details, refer to "TECHNICAL REFERENCE EtherCAT Communication Specification (SX-DSV03456)".
Auto-tuning	The load inertia is identified in real time by the driving state of the motor operating according to the command given by the controller or setup support software PANATERM for Multi. The gain is set automatically in accordance with the rigidity setting.
Notch filter	Available (5 filters available)
Gain switching function	Available
Two-stage torque filter	Available
Position comparison output function	Available [Requirement] EtherCAT communication is established. Return to origin operation completed if in incremental mode. Other than Countinuous rotating absolute mode (Pr0.15=4)
Protective function	Overvoltage, undervoltage, overspeed, overload, overheat, overcurrent, encoder failure, positional overdeviaition, EEPROM failure, PSM main power supply overload (Note 1) etc.
Alarm data history	Available
Deterioration diagnosis function	Available

(Note 1) Supported in a software version of function extended edition 1 or later.

1.8 Differences from MINAS A6B series

The MINAS A6 Multi series has the following specification differences compared to our MINAS-A6B series. Please contact us for specifications other than the following.

■ **SX-DSV03455 : TECHNICAL REFERENCE Functional Specification**

Section	function	content	MINAS A6B	MINAS A6 Multi
			CPU1:Ver1.05 **CPU2:Ver1.05**	**Aaxis CPU1:Ver1.02,CPU2:Ver1.02** **Baxis CPU1:Ver1.02,CPU2:Ver1.02**
2.2	I/O connector output signal	contactor output (MC-OUT)	Not available	Available General-purpose output 1 (EX-OUT) can be used for power supply module contactor output operation.
2.3	I/O connector other signal	Pulse regeneration function	Available	Not available
2.4.1	input signal allocation	Pr4.00 to Pr4.07 bit31-28	Not use	Axis selection bit31-28=0: input in Axis A bit31-28=2: input in Axis B bit31-28=6: input in both Axis A and Axis B
2.4.1	input signal allocation	input pin with latch correction	SI5, SI6, SI7	Axis A : SI5, SI6, SI7 Axis B : SI1, SI2, SI3
2.4.2	output signal allocation	Pr4.10 to Pr4.11 bit31-28	Not use	Axis selection bit31-28=0: output Axis A signal bit31-28=2: output Axis B signal bit31-28=6: output logical OR of Axis A signal and Axis B signal bit31-28=7: output logical AND of Axis A signal and Axis B signal
2.5	Mechanical brake output	Availability	Not available	Available. Output signal can be selected with Pr4.59 "Mechanical brake signal setting"
3.1	Front panel configuration	configuration	• 2 digits 7-segment LED • 4 EtherCAT Indicators LED (RUN, ERR, L/A IN, L/A OUT) • 2 rotary switches for station alias setting • USB connector for DM/PSM	• 2 digits 7-segment LED • 4 EtherCAT Indicators LED (RUN, ERR, L/A IN, L/A OUT) • 2 rotary switches for station alias setting • USB connector for DM/PSM • USB connector for Safety • 1 push switch for display switching • 6-digit dip switch for node address setting of inter-modules communication
3.5	7-segment LED display	display mode	After the control power is turned on, the station alias is displayed. Then the normal display is displayed.	After the control power is turned on, the station alias is displayed. Then transition to the driver information display mode. Switch to safety information display mode by pressing and holding the mode switch button for 3 seconds.
4.2.2	Electronic gear function	Electronic gear ratio range	Ratio range: 1/1000 – 8000 The electronic gear ratio is limited to 1:1 only when the communication cycle is 125 µs.	Ratio range: 1/1000 – 8000 The electronic gear ratio is limited by the combination of communication cycle, PDO size, and electronic gear ratio.
4.6	regenerative resistor	Availability	Available	Move to Power Supply module. ▼ Refer to Refer to section "11 Power Supply Module".
4.7	Absolute setup	battery-less absolute encoder	Not available	Available
4.8	External scale position information monitor function	Availability	Available	Not available

(To be continued)

Section	function	content	MINAS A6B	MINAS A6 Multi
			CPU1:Ver1.05 CPU2:Ver1.05	**Aaxis CPU1:Ver1.02,CPU2:Ver1.02 Baxis CPU1:Ver1.02,CPU2:Ver1.02**
5.2.8	Model-type damping filter	Availability	Available	Not available
6.3.3	Sequence at main power OFF	Availability	Available	Move to Power Supply module. Refer to Refer to section "11 Power Supply Module".
6.5	Position comparison output function	interface	3 photo-couppler output (SO1/SO2/SO3) or 3 line-driver output (OCMP1/OCMP2/OCMP3)	2 photo-couppler output (SO1/SO2) or 2 line-driver output (OCMP1/OCMP2) in total for 2 axes
		output pulse setting	parameter settings	parameter settings for each axis
		compare source	Encoder (Communication) External scale (Communication) External scale (A/B phase)	Encoder (Communication) External scale (Communication) External scale (A/B phase) for each axis
		compare value	8 point	8 point for each axis
6.9	Retraction operation function	Availability	Available	Not available
6.10	Backlash correction function	Availability	Available	Not available
7.1	List of protective functions	Err17.0(Mechanical brake circuit voltage error protection)	Not available	Available
		Err17.1（Mechanical brake circuit overload protection）	Not available	Available
7.2	Details of protective function	Err31(Safety function error protection)	Err31.0(Safety function error protection 1) Err31.2(Safety function error protection 2)	Err31.3(Safety function abnormal protection3) Err31,5(Safety function abnormal protection5)
		Err69.0(Inter-modules communication timeout error protection)	Not available	Available
		Err69.1(Inter-modules communication CRC error protection)	Not available	Available
		Err69.2(Power supply module error protection 1)	Not available	Available
		Err69.3(Power supply module error protection 2)	Not available	Available
		Err69.4(Power supply module error protection 3)	Not available	Available
		Err69.5(Inter-modules communication ID seting error protection)	Not available	Available

(To be continued)

Section	function	content	MINAS A6B	MINAS A6 Multi
			CPU1:Ver1.05 **CPU2:Ver1.05**	**Aaxis CPU1:Ver1.02,CPU2:Ver1.02** **Baxis CPU1:Ver1.02,CPU2:Ver1.02**
7.2	Details of protective function	Err69.6(Excess number of driver module connection error protection)	Not available	Available
		Err97.1(Drive module system error 2)	Not available	Available
		Err97.2(Drive module system error 3)	Not available	Available
		Err88.3(Improper operation error protection)	Err88.3 does not occurs by the combination of communication cycle, PDO size, and electronic gear ratio.	Err88.3 occurs by the combination of communication cycle, PDO size, and electronic gear ratio.
7.3	Warning function	AEh(PSM main power supply overload warning)	Not available	Available (Note 1)
		AFh(PSM rated output power overload warning)	Not available	Available (Note 1)
8	Safety functions	function	Available only STO(Safe Torque Off) function.	Available advanced safety functions. • SIL3, PLe, CAT4 safety levels at maximum. • Select the encoder configuration according to the required safety level. • Duplex safety input / output signals are available for safety functions. • Support 14 types of safety functions including STO and 5 types of optional functions. • Safety monitoring processing can be freely programmed with PANATERM for Safety.
9	List of parameters	multi axis support	Not available Pr4.00 to 07(SI1 to SI8 input selection) Without axis selection Pr4.10 to 11(SO1, SO2 output selection) Without axis selection Pr7.00(Display on LED) Without axis selection Pr7.22,87,99 (Communication function extended setup 1,5,6) Moved part of bits to Pr7.116 to 118.	Available. Pr0.20(Axis limit setting) Pr4.00 to 07(SI1 to SI8 input selection) With axis selection Pr4.10 to 11(SO1, SO2 output selection) With axis selection Pr5.88 to 90(Function extended shared setup 1-3) Pr7.00(Display on LED) With axis selection Pr7.116 to 118(Communication function shared setup 1-3)
		Pulse regeneration function	Available Pr0.11(Number of output pulses per motor revolution) Pr0.12(Reversal of pulse output logic) Pr5.03(Denominator of pulse output division) Pr5.33(Pulse regenerative output limit setup) Pr6.22(AB phase external scale pulse outputting method selection)	Not available
		regenerative function	Available Pr0.16(External regenerative resistor setup) Pr0.17(Selection of load factor for external regenerative resistor)	Move to Power Supply Module. PSM Pr.00(Regenerative operation setup) PSM Pr.01(Regenerative resistor load factor selection)

(Note 1) Supported in a software version of function expansion edition 1 or later.

(To be continued)

Section	function	content	MINAS A6B	MINAS A6 Multi
			CPU1:Ver1.05 **CPU2:Ver1.05**	**Aaxis CPU1:Ver1.02,CPU2:Ver1.02** **Baxis CPU1:Ver1.02,CPU2:Ver1.02**
9	List of parameters	Model-type damping filter	Available Pr2.13(Selection of damping filter switching) All available. Pr6.61 to Pr6.70(Model-type damping rerated)	Not available Pr2.13(Selection of damping filter switching) There are some restrictions.
		Absolute rotary encoder	Available Pr3.23(External scale selection)=6 can be used.	Not available Pr3.23(External scale selection)=6 cannot be used.
		Analog monitor output	Available Pr4.16 to 21(Analog monitor rerated)	Not available
		Mechanical brake output	Not available	Available Pr4.59(Mechanical brake signal setup) Pr5.90(Function extended shared setup 3) Pr6.98(Function expansion setup 4)
		Main power off detection time	Available Pr5.09(Detection time of main power off) Pr7.14(Main power off warning detection time)	Move to Power Supply Module PSM Pr.02(Main power off detection time) PSM Pr.03(Main power off warning detection time)
		USB axis address	Available Pr5.31(USB axis address)	Not available
		Retraction operation function	Available Pr6.85(Retracting operation condition setting) Pr6.86(Retracting operation alarm setting) Pr8.01(Profile linear acceleration constant) Pr8.04(Profile linear deceleration constant) Pr8.17(Relative movement of retracting operation) Pr8.18(Retracting operation speed)	Not available
10.1	Timing chart on power-up	Timing chart	Described as servo driver.	Described in commbination of power supply module and driver module.
11	Power supply module	PSM function	Built in driver module.	Separated from driver module.
11.2	Interface specifications	Inter-modules communication	Not available (unnecessary)	Available. Inter-modules communication is used to transmit information between the power supply module and each driver module.
		External device input	Not available	Available. DIN1: Contactor feedback DIN2: Regenerative register protection feedback
		Contactor control	Not available	Available.

(To be continued)

Section	function	content	MINAS A6B	MINAS A6 Multi
			CPU1:Ver1.05 CPU2:Ver1.05	Aaxis CPU1:Ver1.02,CPU2:Ver1.02 Baxis CPU1:Ver1.02,CPU2:Ver1.02
11.3	Front panel	LED display	One for servo driver	One for servo driver. One for power supply module. green: main power on red: PSM error/warning occur
11.4	Basic functions	Regenerative control function	Built in driver module.	Move to power supply module.
		Main power shutdown monitoring	Built in driver module. (L1-L3)	Move to power supply module. (3-phase)
11.5	Protective functions	Moved from driver module	Err18.0(Over-regeneration load protection) Err18.1(Regenerative transistor error protection)	PSM Err.07(PSM regenerative overload alarm) PSM Err.08(PSM regenerative transistor alarm)
		New addition to PSM	Not available	(Anomaly monitoring) PSM Err.05(PSM main power supply open phase alarm) PSM Err.06(PSM main power supply overcurrent alarm) PSM Err.09(PSM regenerative resistor monitoring alarm) PSM Err.10(PSM heat sink overheat alarm) PSM Err.14(PSM contactor feedback alarm) (Inter-module communication) PSM Err.22(PSM detection of excess number of connected driver module alarm) PSM Err.23(PSM inter-module communication timeout alarm) PSM Err.24(PSM inter-module communication CRC alarm) PSM Err.26(PSM inter-module communication ID setting alarm) PSM Err.27(PSM main power supply overload alarm) (Note 1) (self-check function) PSM Err.11(PSM heat sink thermal alarm) PSM Err.15(PSM main power current detection circuit alarm) PSM Err.16(PSM regenerative transistor short circuit alarm) PSM Err.17(PSM self check alarm)
		Monitor with both driver modle and power supply module	Err11.0(Control power supply undervoltage protection) Err12.0(Over-voltage protection) Err15.0(Over-heat protection) Err72.0(Thermal error protection) Err36.0 to 1(EEPROM parameter error protection) Err37.0 to 2(EEPROM check code error protection)	PSM Err.01(PSM control power supply undervoltage alarm) PSM Err.02(PSM main power supply overvoltage alarm) PSM Err.12(PSM overheat alarm) PSM Err.13(PSM thermal alarm) PSM Err.18 to 21(PSM EEPROM check alarm 1-4)
11.5.3	Warning functions	Moved from driver module	Warn.C3(Main power off warning) Warn.A1(Over-regeneration warning)	PSM Warn.01(PSM main power off warning) PSM Warn.02(PSM regeneration overload warning)
		Monitor with both driver modle and power supply module	Warn.A3(Fan warning)	PSM Warn.03(PSM fan lock warning)
		New addition to PSM	Not available	PSM Warn.04(PSM main power supply overload warning) (Note 1) PSM Warn.05(PSM rated output power overload warning) (Note 1)
		PSM alarm mask	Not available	Available (Note 1)
11.6	List of power supply module parameters	PSM parameters	Not available	Available
		PSM alarm mask	Not available	Available PSM Pr.07 (PSM alarm mask) (Note 1)

(Note 1) Supported in a software version of function expansion edition 1 or later.

(Blank page)

2

Interface Specifications

2.1 I/O connector input signal

Signal name	Symbol	Connector pin No. (Note 2) (Note 4)	Contents	Related control mode				EtherCAT communications	
				Position	Velocity	Torque	Full-close	command	monitor (Note 3)
Input signal source	SI-COM	5	Connect to the positive or negative terminal of the external DC source (12–24 V).						
Forced alarm input	E-STOP	*	Generates Err 87.0 “Forced alarm input error”.	✓	✓	✓	✓	-	-
Positive direction over-travel inhibition input	POT	[Axis A] 12 (SI6) [Axis B] 2 (SI2)	• Positive direction over-travel inhibit input. • The operation with this input turned ON is set up in Pr 5.04 "Setup of over-travel inhibit input". • When using Positive direction over-travel inhibit input, connect the signal so that the input is turned ON when the moving portion of the machine travels in positive direction exceeding a limit. • If used as a home position reference trigger in a home position return, this input signal should be SI6 for Axis A and SI2 for Axis B, respectively. • The signal width should be 1 ms or longer then at the time of closing, and should be 2 ms or longer then at the time of opening. Please keep in mind that it cannot guarantee this value.	✓	✓	✓	✓	-	✓
Negative direction over-travel inhibition input	NOT	[Axis A] 13 (SI7) [Axis B] 3 (SI3)	• Negative direction over-travel inhibit input. • The operation with this input turned ON is set up in Pr 5.04 "Setup of over-travel inhibit input". • When using Negative direction over-travel inhibit input, connect the signal so that the input is turned ON when the moving portion of the machine travels in negative direction exceeding a limit. • If used as a home position reference trigger in a home position return, this input signal should be SI7 for Axis A and SI3 for Axis B, respectively. • The signal width should be 1 ms or longer then at the time of closing, and should be 2 ms or longer then at the time of opening. Please keep in mind that it cannot guarantee this value.	✓	✓	✓	✓	-	✓
Near home input	HOME	[Axis A] 11 (SI5) [Axis B] 1 (SI1)	• When using the near home sensor during the return to home position operation, input the sensor signal. • If used as a home position reference trigger in a home position return, this input signal should be SI5 for Axis A and SI1 for Axis B, respectively. The signal width should be 1 ms or longer then at the time of closing, and should be 2 ms or longer then at the time of opening. Please keep in mind that it cannot guarantee this value.	✓	✓	✓	✓	-	✓

(To be continued)

<table>
<tr><th rowspan="2">Signal name</th><th rowspan="2">Symbol</th><th rowspan="2">Connector pin No.
(Note 2)
(Note 4)</th><th rowspan="2">Contents</th><th colspan="4">Related control mode</th><th colspan="2">EtherCAT communications</th></tr>
<tr><th>Position</th><th>Velocity</th><th>Torque</th><th>Full-close</th><th>command</th><th>monitor (Note 3)</th></tr>
<tr><td>External latch input 1</td><td>EXT1</td><td>*</td><td rowspan="2">• These signals are used for touch-probe function or homing function.
• This input can only be set to a-contact.
• The signal width should be 1 ms or longer then at the time of closing, and should be 2 ms or longer then at the time of opening.
It cannot guarantee this value.
• EXT1 for Axis A can only be assigned to SI5 and EXT2 to SI6, and EXT1 of Axis B to SI1 and EXT2 to SI2.</td><td>✓</td><td>✓</td><td>✓</td><td>✓</td><td>-</td><td>✓</td></tr>
<tr><td>External latch input 2</td><td>EXT2</td><td>*</td><td>✓</td><td>✓</td><td>✓</td><td>✓</td><td>-</td><td>✓</td></tr>
<tr><td>General purpose monitor input 1</td><td>SI-MON1</td><td>*</td><td rowspan="5">• Used as the general purpose monitor input.
• This input does not affect the operation, and can be used for monitoring through,
<table><tr><td>2321h/2721h</td><td>Logical input signa</td></tr><tr><td>2323h/2723h</td><td>Logical input signal [expansion portion]</td></tr><tr><td>60FDh/68FDh</td><td>Digital inputs</td></tr></table></td><td colspan="4" rowspan="5">(Note 1)</td><td>-</td><td>✓</td></tr>
<tr><td>General purpose monitor input 2</td><td>SI-MON2</td><td>*</td><td>-</td><td>✓</td></tr>
<tr><td>General purpose monitor input 3</td><td>SI-MON3</td><td>*</td><td>-</td><td>✓</td></tr>
<tr><td>General purpose monitor input 4</td><td>SI-MON4</td><td>[A or B]
4
(SI4)</td><td>-</td><td>✓</td></tr>
<tr><td>General purpose monitor input 5</td><td>SI-MON5</td><td>[A or B]
14
(SI8)</td><td>-</td><td>✓</td></tr>
<tr><td>External alarm clear input</td><td>A-CLR</td><td>*</td><td>• Dis arm inputs the alarm.
• There are alarms that cannot be disarmed by this input.</td><td>✓</td><td>✓</td><td>✓</td><td>✓</td><td>-</td><td>✓</td></tr>
<tr><td>Dynamic brake (DB) switching input</td><td>DB-SEL</td><td>*</td><td>• Switches the dynamic brake (DB) ON/OFF after stop (when the main power is off).
• Switching is only possible when main power supply off is detected.
▼ Refer to
For details, refer to "6.3.3 Sequence at main power OFF"</td><td>✓</td><td>✓</td><td>✓</td><td>✓</td><td>-</td><td>✓</td></tr>
</table>

(Note 1) General purpose monitor input can be used for monitoring, but does not affect driver module operations.

(Note 2) Except for I-COM, input signal pin assignment can be changed. The pins in “Connector pin No.” column in the table denote factory default settings. The signal with a pin that is marked with “*” is not assigned by default.
▼ Refer to
For more information, refer to “2.4.1 Input signal allocation”.

(Note 3) It is possible to monitor the condition of the signals where “✓” is attached to the EtherCAT communication monitor on the table with 2321h/2721h (Logical input signal), 2323h/2723h (Logical input signal [expansion portion]), 60FDh/68FDh (Digital inputs).

(Note 4) [A or B] in "Connector pin No." column in the table indicates that this signal is accepted by both Axis A and Axis B.
▼ Refer to
For details, refer to section "2.4.1 Input signal allocation".

2.2 I/O connector output signal

Signal name	Symbol	Connector pin No. (Note 2)	Contents	Related control mode				EtherCAT communications	
				Position	Velocity	Torque	Full-close	command	monitor (Note 3)
Servo-Alarm output	ALM	[Axis A] 8 (SO1+) [Axis B] 9 (SO2+)	• This signal shows that the driver is in alarm status. • Output transistor turns ON when the driver is at normal status, and turns OFF at alarm status.	✓	✓	✓	✓	-	✓
		[Axis A] 18 (SO1-) [Axis B] 19 (SO2-)		✓	✓	✓	✓	-	✓
Servo-Ready output	S-RDY	*	• This signal shows that the driver is ready to be activated. • The driver module becomes ready when all the following conditions are satisfied, and the output transistor is turned on. - Control/Main power is established. - Alarm does not occur. - EtherCAT communication is established.	✓	✓	✓	✓	-	✓
External brake release signal	BRK-OFF	*	• Feeds out the timing signal which activates the electromagnetic brake of the motor. • Transistor is turned ON when electromagnetic brake is released. • This output needs to be assigned to every control mode.	✓	✓	✓	✓	-	✓
set brake output	set brake	*	• Outputs the signal configured at 60FEh/68FEh: Digital output /bit 0. • Transistor will be turned off at "1". (Brake will be activated.) • See the notes (Note 4) state the output transistor.	✓	✓	✓	✓	✓	-
Positioning complete	INP	*	• Outputs the positioning complete signal/positioning complete signal. • Turns ON the output transistor when positioning is completed. Refer to For details, refer to "4.2.4 Positioning complete output (INP/INP2) function"	✓	-	-	✓	-	✓
Speed arrival output	AT-SPEED	*	• Outputs the speed arrival signal. • Turns on the output transistor when a velocity is reached. Refer to For details, refer to "4.3.1 Attained speed output (AT-SPEED)"..	-	✓	✓	-	-	✓
Torque in-limit signal output	TLC	*	• Outputs the torque in-limit signal. • Turns on the output transistor when torque is limited.	✓	✓	✓	✓	-	✓

(To be continued)

Signal name	Symbol	Connector pin No. (Note 2)	Contents	Related control mode				EtherCAT communications	
				Position	Velocity	Torque	Full-close	command	monitor (Note 3)
Zero-speed detection output signal	ZSP	*	• Outputs the zero-speed detection signal. • Turns on the output transistor when zero velocity is detected.	✓	✓	✓	✓	-	✓
Speed matching output	V-COIN	*	• Outputs the speed matching signal. • Turns on the output transistor when velocity matches. ▼ Refer to For details, refer to "4.3.2 Speed coincidence output (V-COIN)".	-	✓	✓	-	-	✓
Positioning complete 2	INP2	*	• Outputs the positioning complete signal/positioning complete signal 2. • Turns on the output transistor upon positioning completion 2. ▼ Refer to For details, refer to "4.2.4Positioning complete output (INP/INP2) function".	✓	-	-	✓	-	✓
Warning output 1	WARN1	*	• Outputs the warning output signal set to Pr 4.40 “Warning output select 1” • Turns on the output transistor when a selected alarm occurs.	✓	✓	✓	✓	-	✓
Warning output 2	WARN2	*	• Outputs the warning output signal set to Pr 4.41 “Warning output select 2” • Turns on the output transistor when a selected alarm occurs.	✓	✓	✓	✓	-	✓
Positional command ON/OFF output	P-CMD	*	• Outputs the position command ON/OFF signal. • Turns on the output transistor when the positioning command (before filter) is other than 0 (with positioning command).	✓	-	-	✓	-	✓
Speed in-limit output	V-LIMIT	*	• Outputs the speed limit signal during torque command. • Turns on the output transistor when velocity is limited.	-	-	✓	-	-	✓
Alarm attribute output	ALM-ATB	*	• The signal is output if an alarm which can be cleared, is input. • Turns on the output transistor when an alarm occurs.	✓	✓	✓	✓	-	✓
Velocity command ON/OFF output	V-CMD	*	• Turns on output transistor when the velocity command is applied while the velocity is controlled. • Turns on the output transistor if the velocity command (before filter) is not less than 30r/min (with velocity command).	-	✓	-	-	-	✓
General purpose output 1	EX-OUT1	*	• Output signal set by Bit16 of 60FEh/68FEh (Digital outputs). (ON at 1, OFF at 0) • For the state of the output transistor, refer to Note (Note 4). • Only for the Axis A of the driver module with an inter-module communication ID of 1, the general-purpose output EX-OUT1 can be replaced with the contactor output MC-OUT of the power supply module. See note (Note 7).	✓	✓	✓	✓	✓	✓

(To be continued)

Signal name	Symbol	Connector pin No. (Note 2)	Contents	Related control mode				EtherCAT communications	
				Position	Velocity	Torque	Full-close	command	monitor (Note 3)
Servo on status output	SRV-ST	*	Turns on the output transistor during servo on.	✓	✓	✓	✓	-	✓
Position comparison output	CMP-OUT	*	The output transistor is turned ON or OFF when the actual position passes the position set by the parameter.	✓	✓	✓	✓	-	-
Deterioration diagnosis velocity output	V-DIAG	*	• Output transistor turned ON when motor speed is within the range of Pr4.35 “Speed coincidence range” of Pr5.75 “Deterioration diagnosis velocity setting”. • There is a hysteresis of 10r/min in the coincidence judgment of deterioration diagnosis velocity.	✓	✓	✓	✓	-	✓

(Note 1) For the signal with “-” sign in the “Related control mode” column, the output transistor is always turned off in that control mode.

(Note 2) Output pin assignment can be changed. The pins in “Connector pin No.” column in the table denote factory default settings. The signal with a pin that is marked with “*” is not assigned by default.

▼ Refer to
For more information, refer to “ 2.4.2 Output signal allocation”.

(Note 3) It is possible to monitor the condition of the signals where “✓” is attached to the EtherCAT communication monitor on the table with 2322h/2722h (Logical output signal) or 60FDh/68FDh (Digital inputs).

(Note 4) The state of output transistor changes as follows in each EtherCAT communication state:

Symbol	Setting value of Pr7.24	Setting value of 60FEh/68FEh		State of output transistor (SO1/SO2)			
		01h (Physical outputs)	02h (Bit mask)	Reset	Communication established (Note 5)	Communication intercepted (Note 5)	Communication re-established (Note 5)
set brake	-	0	0	set brake = 1 (brake on)	set brake = 1 (brake on)	set brake = 1 (brake on)	set brake = 1 (brake on)
		1					
		0	1	set brake = 1 (brake on)	set brake = 0	set brake = 1 (brake on)	set brake = 0
		1			set brake = 1 (brake on)		set brake = 1 (brake on)
EX-OUT 1	bit0 = 0 (hold)	0	0	EX-OUT1 = 0	EX-OUT1 = 0	EX-OUT1 = 0	EX-OUT1 = 0
		1					
		0	1	EX-OUT1 = 0	EX-OUT1 = 0	EX-OUT1 = 0 (hold)	EX-OUT1 = 0
		1			EX-OUT1 = 1	EX-OUT1 = 1 (hold)	EX-OUT1 = 1
	bit0 = 1 (initialization)	0	0	EX-OUT1 = 0	EX-OUT1 = 0	EX-OUT1 = 0	EX-OUT1 = 0
		1					
		0	1	EX-OUT1 = 0	EX-OUT1 = 0	EX-OUT1 = 0	EX-OUT1 = 0
		1			EX-OUT1 = 1		EX-OUT1 = 1

(Note 5) “Communication established”, “Communication intercepted”, and “Communication re-established” refer to the following cases.

Communication established	ESM state is PreOP or higher
Communication intercepted	PDO communication is disabled(ESM state transitioned to other states than OP), or SDO communication is disabled(ESM state transitioned to Init)
Communication re-established	60FEh-01h or 60FEh-02h has been written successfully

(Note 6) Pr4.59 (Mechanical brake signal setting) sets the mechanical brake signal output from the mechanical brake output (BRK +/-) and does not affect the set brake output from SO1 / SO2.

◆ CAUTION

- **Safety precautions:**
  When executing set brake signal control using 60FEh/68FDh (Digital outputs), be sure to use it in PDO and enable the PDO watch dog.
  In SDO, the communication shutoff cannot be judged, the brake may be kept to be released and it is unsafe.
  Please ensure safety on the equipment side.

(Note 7) The general-purpose output 1 (EX-OUT1) can be replaced with the contactor output (MC-OUT) of the power supply module only for the Axis A of the driver module with the inter-module communication node address set to 1.
In addition, the following parameter settings are required:
<Relevant parameters>

Class	No.	Attribute	Parameter name	Unit	Range	Function
7	24	C	Communication function extended setup 3	-	-32768 to 32767	bit 0 : EX-OUT1 output (MC-OUT output) setting when EtherCAT communication is cut off 0: Hold output when communication is interrupted 1: Output initialization (OFF) when communication is cut off * The output will be OFF regardless of this setting until the EtherCAT communication is established after the power is turned on.
7	87	C	Communication function extended setup 5	-	-32768 to 32767	bit1: Power supply module contactor output switching 0: Use EX-OUT1 with general-purpose output 1 1: EX-OUT1 is used as the contactor output (MC-OUT). * This setting is valid only for the Axis A parameter of the driver module whose module communication node address is 1.

When the control power is turned on with the above settings, the contactor output (MC-OUT) of the power supply module can be operated with the Axis A object 60FEh (Digital outputs) of the driver module with the inter-module communication node address set to 1.

Symbol	Setting value of Pr7.24	Setting value of 60FEh (Axis A)		State of output relay (PSM X101 connector MC1/MC2)			
		01h (Physical outputs)	02h (Bit mask)	Reset	Communication established (Note 5)	Communication intercepted (Note 5)	Communication re-established (Note 5)
MC-OUT	bit0 = 0 (hold)	0	0	MC-OUT = 0 (Relay open)	MC-OUT = 0 (Relay open)	MC-OUT = 0 (Relay open)	MC-OUT = 0 (Relay open)
		1					
		0	1	MC-OUT = 0 (Relay open)	MC-OUT = 0 (Relay open)	MC-OUT = 0 (Relay open, hold)	MC-OUT = 0 (Relay open)
		1			MC-OUT = 1 (Relay short)	MC-OUT = 1 (Relay short, hold)	MC-OUT = 1 (Relay short)
	bit0 = 1 (initialization)	0	0	MC-OUT = 0 (Relay open)	MC-OUT = 0 (Relay open)	MC-OUT = 0 (Relay open)	MC-OUT = 0 (Relay open)
		1					
		0	1	MC-OUT = 0 (Relay open)	MC-OUT = 0 (Relay open)	MC-OUT = 0 (Relay open)	MC-OUT = 0 (Relay open)
		1			MC-OUT = 1 (Relay short)		MC-OUT = 1 (Relay short)

2.3 I/O connector other signal

2.3.1 Position comparison output signal

Signal name	Symbol	Connector pin No. (Note 1)	Contents	Related control mode				EtherCAT communications	
				Position	Velocity	Torque	Full-close	command	monitor (Note 2)
Position comparison output 1	OCMP1+	17	• The position compare output signal is output differentially (RS422 equivalent). • Ground for line driver of output circuit is connected to signal ground (GND) and is not insulated. • Max. output frequency is 4 Mpps. • When Pr4.47 "Pulse output selection" is set to 1, can be used as position compare output.	✓	✓	✓	✓	-	-
	OCMP1-	18		✓	✓	✓	✓	-	-
Position comparison output 2	OCMP2+	20		✓	✓	✓	✓	-	-
	OCMP2-	19		✓	✓	✓	✓	-	-
Signal ground	GND	16	Signal ground						

(Note 1) Output pin assignment can be changed. The pins in “Connector pin No.” column in the table denote factory default settings. The signal with a pin that is marked with “*” is not assigned by default.
Refer to
For more information, refer to “2.4.2 Output signal allocation”.

(Note 2) It is possible to monitor the condition of the signals where “✓” is attached to the EtherCAT communication monitor on the table with 2322h/2722h (Logical output signal) or 60FDh/68FDh (Digital inputs).

2.3.2 Other signals

Signal name	Symbol	Connector pin No. (Note 1)	Contents	Related control mode				EtherCAT communications	
				Position	Velocity	Torque	Full-close	command	monitor (Note 2)
Frame ground	FG	shell	• This output is connected to the ground terminal inside of the driver module.						
For manufacturer’s use	-	23, 24	• Keep these pins unconnected.						

(Note 1) Output pin assignment can be changed. The pins in “Connector pin No.” column in the table denote factory default settings. The signal with a pin that is marked with “*” is not assigned by default.
Refer to
For more information, refer to “2.4.2 Output signal allocation”

(Note 2) It is possible to monitor the condition of the signals where “✓” is attached to the EtherCAT communication monitor on the table with 2322h/2722h (Logical output signal) or 60FDh/68FDh (Digital inputs).

2.4 I/O signal allocation function

Default I/O signal allocation can be changed.

2.4.1 Input signal allocation

Desired input signal can be allocated to any input pin of I/O connector. The logic can be changed. Some allocation limit is applied to specific signals. Refer to "2.4.1.2 Reallocation of input signal".

2.4.1.1 Using with the default setting

The table below shows default signal allocation.

◆ **NOTE**

- **Default settings of certain model will differ from those shown below. If the default settings shown in "REFERENCE SPECIFICATIONS Driver module section (SX-DSV03454)" are different from values shown below, the settings described in "SX-DSV03454" are valid default values.**

Pin name	Pin No.	Applicable parameter	Default setting ( ): decimal notation	Default setup		
				Axis Selection (Note 2)	Signal	Logic (Note 1)
SI1	1	Pr 4.00	20222222h (539107874)	Axis B	HOME	a-contact
SI2	2	Pr 4.01	20818181h (545358209)	Axis B	POT	b-contact
SI3	3	Pr 4.02	20828282h (545424002)	Axis B	NOT	b-contact
SI4	4	Pr 4.03	60313131h (1613836593)	A or B	SI-MON4	a-contact
SI5	11	Pr 4.04	00222222h (2236962)	Axis A	HOME	a-contact
SI6	12	Pr 4.05	00818181h (8487297)	Axis A	POT	b-contact
SI7	13	Pr 4.06	00828282h (8553090)	Axis A	NOT	b-contact
SI8	14	Pr 4.07	60323232h (1613902386)	A or B	SI-MON5	a-contact

(Note 1) Meaning of a-contact and b-contact:

a-contact	When the current in the input circuit is shut down and the photocoupler is turned OFF, the allocated function is disabled (OFF state) When the current flows through the input circuit and the photocoupler is turned ON, the allocated function is enabled (ON state)
b-contact	When the current in the input circuit is shut down and the photocoupler is turned OFF, the function is enabled (ON state) When the current flows through the input circuit and the photocoupler is turned ON, the function is disabled (OFF state)

For the purpose of this specification, the status of the input signal is defined as ON when the signal activates the specified function and OFF when the signal deactivates the specified function.
And when the photocoupler is turned OFF, time to signal detection becomes long and Variation becomes large.

(Note 2) Axis selection indicates the axis that accepts input signals.
Axis A: Only the Axis A accepts input signals.
Axis B: Only the Axis B accepts input signals.
A or B: Both Axis A and Axis B accept input signals.

2.4.1.2 Reallocation of input signal

To change the allocation of input signal, change the following parameters.

■ **Relevant parameters**

<table>
<tr><th>Class</th><th>No.</th><th>Attribute</th><th>Parameter name</th><th>Unit</th><th>Range</th><th>Function</th><th>Latch correction function</th></tr>
<tr><td>4</td><td>00</td><td>C
S</td><td>SI1 input selection</td><td>-</td><td>-2147483648 to 2147483647</td><td>Assign functions to SI1 inputs.
These parameters are presented in hexadecimals.
Hexadecimal presentation is followed by a specific control mode designation.
n 0 – – – – * * h: position/full-closed control
n 0 – – * * – – h: velocity control
n 0 * * – – – – h: torque control
(1) Replace "**" with the function number. Refer to the Input function number table. Both signal and logic are involved a function number.
(2) Set axis selection to input in 4bit (bit31 to 28) of "n"
<table>
<tr><td>n=0 (Axis A)</td><td>Only the Axis A accepts input signals.</td></tr>
<tr><td>n=2 (Axis B)</td><td>nly the Axis B accepts input signals.</td></tr>
<tr><td>n=6 (A or B)</td><td>Both Axis A and Axis B accept input signals.</td></tr>
</table>
Note
Do not specify any other settings.

Example 1)
When SI6 pin is specified as POT b-contact and assigned to Axis A,
set Pr4.05 to 00818181h
Example 2)
When SI1 pin is specified as HOME a-contact and assigned to Axis B,
set Pr4.00 to 00222222h
Example 3)
When SI8 pin is specified as E-STOP b-contact and assigned to both Axis A and Axis B,
set Pr4.07 to 60949494h
Note
This pin has a latch correction function for Axis B.</td><td>Axis B</td></tr>
</table>

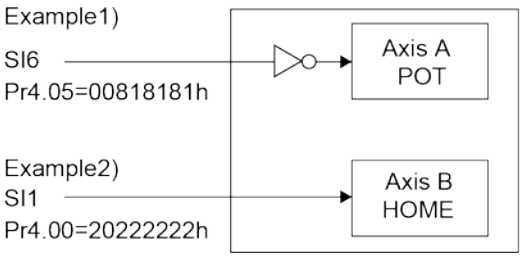

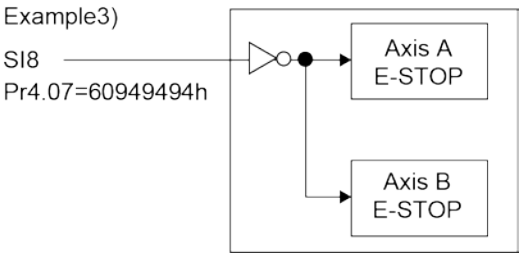

Class	No.	Attribute	Parameter name	Unit	Range	Function	Latch correction function
4	01	C S	SI2 input selection	-	-2147483648 to 2147483647	Assign functions to SI2 inputs. Setup procedure is the same as described for Pr 4.00. Note This pin has a latch correction function for Axis B.	Axis B
4	02	C S	SI3 input selection	-	-2147483648 to 2147483647	Assign functions to SI3 inputs. Setup procedure is the same as described for Pr 4.00. Note This pin has a latch correction function for Axis B.	Axis B
4	03	C S	SI4 input selection	-	-2147483648 to 2147483647	Assign functions to SI4 inputs. Setup procedure is the same as described for Pr 4.00.	
4	04	C S	SI5 input selection	-	-2147483648 to 2147483647	Assign functions to SI5 inputs. Setup procedure is the same as described for Pr 4.00. Note This pin has a latch correction function for Axis A.	Axis A
4	05	C S	SI6 input selection	-	-2147483648 to 2147483647	Assign functions to SI6 inputs. Setup procedure is the same as described for Pr 4.00. Note This pin has a latch correction function for Axis A.	Axis A
4	06	C S	SI7 input selection	-	-2147483648 to 2147483647	Assign functions to SI7 inputs. Setup procedure is the same as described for Pr 4.00. Note This pin has a latch correction function for Axis A.	Axis A
4	07	C S	SI8 input selection	-	-2147483648 to 2147483647	Assign functions to SI8 inputs. Setup procedure is the same as described for Pr 4.00.	

■ Input function number table

Title	Symbol	Setup value	
		a-contact	b-contact
Invalid	—	00h	Can not configure
Positive direction over-travel inhibition input	POT	01h	81h
Negative direction over-travel inhibition input	NOT	02h	82h
External alarm clear input	A-CLR	04h	Can not configure
Forced alarm input	E-STOP	14h	94h
Dynamic brake switching input	DB-SEL	16h	Can not configure
External latch input 1	EXT1	20h	A0h
External latch input 2	EXT2	21h	A1h
Near home input	HOME	22h	A2h
General purpose monitor input1	SI-MON1	2Eh	AEh
General purpose monitor input2	SI-MON2	2Fh	AFh
General purpose monitor input3	SI-MON3	30h	B0h
General purpose monitor input4	SI-MON4	31h	B1h
General purpose monitor input5	SI-MON5	32h	B2h

Cautions for input signal assignment

- Do not setup to a value other than that specified in the table.
- The same signal can't be assigned to multiple pins. Otherwise, duplicated assignment will cause Err 33.0 "Input multiple assignment error 1 protection" or Err 33.1 "Input multiple assignment error 2 protection".
- A signal used in multiple control modes should be assigned to the same pin and the logic should be matched. If not assigned to the same pin, the Err33.0 "Input duplicate assignment error 1 protection" or Err33.1 "Input duplicate assignment error 2 protection" occurs. In case that the logics do not match, Err33.2 "Input function number error 1 protection" or Err33.3 "Input function number error 2 protection" will occur.
- The duplicated assignment of SI-MON1 and EXT1, SI-MON2 and EXT2, SI-MON3 and EXT3, and SI-MON5 and E-STOP is not allowed. Duplicate assignment will cause Err33.0 "Input duplicate assignment error 1 protection" or Err33.1 "Input duplicate assignment error 2 protection".
- A-CLR can only be set at a-connect. If set at b-connect, then Err33.2 "Input function number assignment error 1 protection" or Err33.3 "Input function number assignment error 2 protection" will occur.
- Depending on the operating status of the driver module, the control mode may be forcibly switched inside the driver module regardless of commands from the host device. This operation has an effect on input signal processing. Basically, assign the same function to one terminal in all control modes.

  [Conditions that the control mode is switched forcibly inside the driver]

  - When the frequency characteristic is measured by setup support software PANATERM for Multi. (Position loop characteristics mode is position control, the speed closed loop characteristic mode and torque speed (vertical) mode are speed control, torque speed (normal) mode is torque control.)
  - Test run of the setup support software (Forcibly position control).
  - The states that are written "Forcibly position control" in Section "6.3 Deceleration stop sequence".
  - During retracting operation function (Forcibly position control) (Not supported)
- Setting is required for all control modes after setting Pr6.36 "Dynamic brake operation input setup" to 1, in case of using dynamic brake switching input (DB-SEL). In case only one or two control modes are set, either Err33.2 "Input function number error 1" or Err33.3 "Input function number error 2" will occur.

  Refer to

  Please refer to "6.3.3 Sequence at main power OFF" for details.
- Inputs to the axis which is set as invalid in Pr0.20 " Axis limit setting" will be fixed to OFF regardless of the assignment setting.

Cautions for latch correction pins (Axis A: SI5/SI6/SI7, Axis B: SI1/SI2/SI3)

- External latch inputs EXT1 and EXT2 can be assigned only to SI5 and SI6 for Axis A, and to SI1 and SI2 for Axis B as shown in the figure below. Wrong allocation will cause Err33.8 "Latch input allocation error protection". For this reason, Err33.8 occurs even if EXT1 or EXT2 are set to input to both Axis A and Axis B.
- When HOME/POT/NOT is used as the home reference trigger in the return to home position operation, it can only be assigned to SI5, SI6, or SI7 for Axis A, and to SI1, SI2, or SI3 for Axis B as shown in the figure below. Err33.8 "Latch input allocation error protection" will occur if it is assigned to any other input.
- When using the latch correction pins (Axis A: SI5 / SI6 / SI7, Axis B: SI1 / SI2 / SI3), the same setting is required for all control modes. If only one or two control modes are set, Err33.8 “Latch input assignment error protection” occurs.

■ Connections to use edge of the sensor signal as home position

Axis A

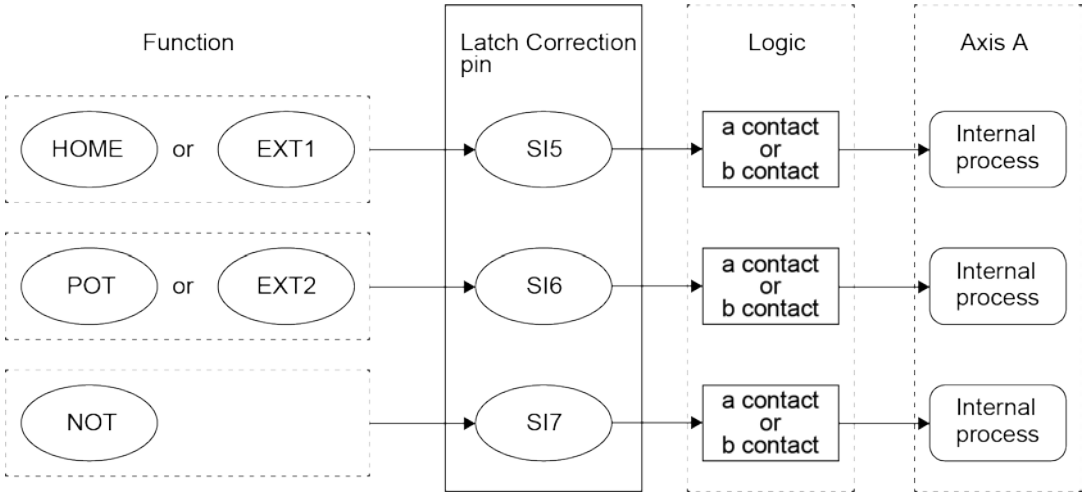

Axis B

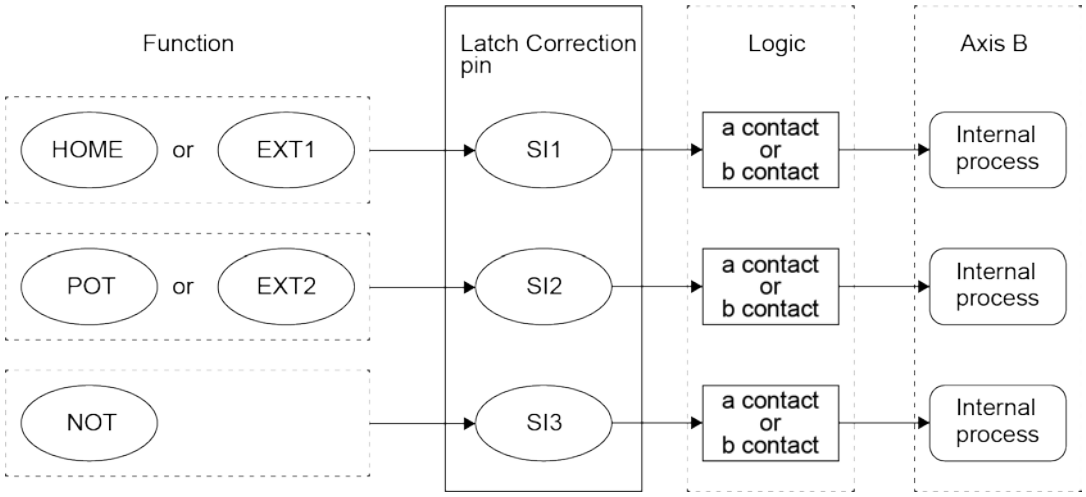

- When using POT/NOT as the home reference trigger in the return to home position operation, set Pr5.04 to 1. If Pr5.04 is not 1, Err38.2 "Over-travel inhibit input protection 3" occurs.

  *) When using POT/NOT with Pr 5.04 not = 1, set SI2, SI3 and SI6, SI7 from the factory setting as shown in the table below. Also, connect the sensors to SI2 and SI3 on Axis A and SI6 and SI7 to Axis B.

Pin name	Pin No.	Applicable parameter	Default setup		Example of setup change	
			( ): decimal notation	Axis Selection /Signal / Logic	( ): decimal notation	Axis Selection /Signal / Logic
SI1	1	Pr 4.00	20222222h (539107874)	Axis B /HOME /a-contact	20222222h (539107874)	Axis B /HOME /a-contact
SI2	2	Pr 4.01	20818181h (545358209)	Axis B /POT /b-contact	00818181h (8487297)	Axis A /POT /b-contact
SI3	3	Pr 4.02	20828282h (545424002)	Axis B /NOT /b-contact	00828282h (8553090)	Axis A /NOT /b-contact
SI4	4	Pr 4.03	60313131h (1613836593)	A or B /SI-MON4 /a-contact	60313131h (1613836593)	A or B /SI-MON4 /a-contact
SI5	11	Pr 4.04	00222222h (2236962)	Axis A /HOME /a-contact	00222222h (2236962)	Axis A /HOME /a-contact
SI6	12	Pr 4.05	00818181h (8487297)	Axis A /POT /b-contact	20818181h (545358209)	Axis B /POT /b-contact
SI7	13	Pr 4.06	00828282h (8553090)	Axis A /NOT /b-contact	20828282h (545424002)	Axis B /NOT /b-contact
SI8	14	Pr 4.07	60323232h (1613902386)	A or B /SI-MON5 /a-contact	60323232h (1613902386)	A or B /SI-MON5 /a-contact

◆ CAUTION

- **The over-travel inhibit input (POT, NOT) and forced alarm input (E-STOP) should normally be set to b-contact, which stops when wire is broken.**
  If a-contact is specified, be sure that there is no safety hazard.

2.4.2 Output signal allocation

For the output signals, any functions can be assigned to the output pins of the I/O connector. Some assignments may be restricted. Refer to "2.4.2.2 Reallocation of input signal".

2.4.2.1 Using the default setting

The table below shows default signal allocation.

◆ **NOTE**

- **Default settings of certain model will differ from those shown below. If the default settings shown in "REFERENCE SPECIFICATIONS Driver module section (SX-DSV03454)" are different from values shown below, the settings described in "SX-DSV03454" are valid default values.**

Pin name	Pin No.	Applicable parameter	Default setting ( ): decimal notation	Default setup	
				Axis Selection (Note 1)	Signal
SO1	8 18	Pr 4.10	00010101h (65793)	Axis A	ALM
SO2	9 19	Pr 4.11	20010101h (536936705)	Axis B	ALM

(Note 1) Axis selection sets which axis's output status is actually output.
Axis A: Axis A output state is output.
Axis B: Axis B output state is output.
A and B: The result of logical AND of Axis A and Axis B is output.
A or B: The result of logical OR of Axis A and Axis B is output.

2.4.2.2 Reallocation of input signal

To change the allocation of output signal, change the following parameters.

■ **Relevant parameters**

<table>
<tr><th>Class</th><th>No.</th><th>Attribute</th><th>Parameter name</th><th>Unit</th><th>Range</th><th>Function</th></tr>
<tr><td>4</td><td>10</td><td>C
S</td><td>SO1 output selection</td><td>-</td><td>-2147483648 to 2147483647</td><td>Assign functions to SO1 outputs.
These parameters are presented in hexadecimals.
Hexadecimal presentation is followed by a specific control mode designation.
n 0 – – – – * * h: position/full-closed control
n 0 – – * * – – h: velocity control
n 0 * * – – – – h: torque control
(1)Replace "**" with the function number. Refer to the Output function number table.
(2)Set the synthesis method of Axis A output and Axis B output in 4bit (bit31 to 28) of "n".
<table>
<tr><td>n=0 (Axis A)</td><td>Axis A output state is output.</td></tr>
<tr><td>n=2 (Axis B)</td><td>Axis B output state is output.</td></tr>
<tr><td>n=6 (A or B)</td><td>The result of logical OR of Axis A and Axis B is output.</td></tr>
<tr><td>n=7 (A and B)</td><td>The result of logical AND of Axis A and Axis B is output.</td></tr>
</table>
Note
Do not specify any other settings.

Example 1)
When SO1 pin is specified as Axis A INP,
set Pr4.10 to 00040404h
Example 2)
When SO2 pin is specified as Axis B INP,
set Pr4.11 to 20040404h
Example 3)
When SO1 pin is specified as Axis A ALM or Axis B ALM,
set Pr4.10 to 60010101h
Example 4)
When SO2 pin is specified as Axis A ALM and Axis B ALM,
set Pr4.11 to 70010101h</td></tr>
<tr><td>4</td><td>11</td><td>C
S</td><td>SO2 output selection</td><td>-</td><td>-2147483648 to 2147483647</td><td>Assign functions to SO2 outputs.
Setup procedure is the same as described for Pr 4.10.</td></tr>
</table>

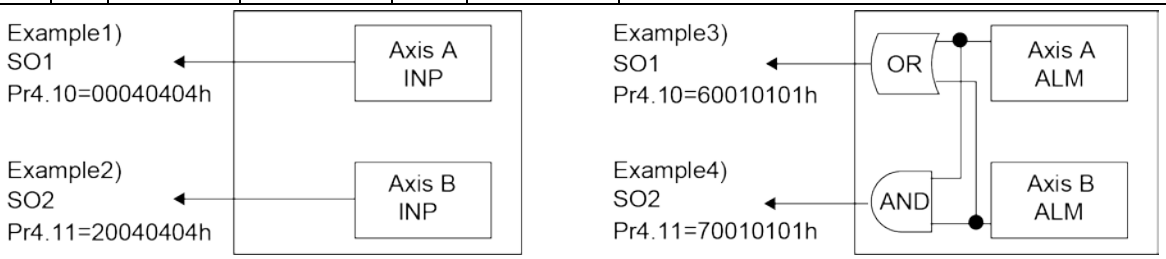

■ Output function number table

Title	Symbol	Setup value: a-contact
Invalid	-	00h
Alarm output	ALM	01h
Servo-Ready output	S-RDY	02h
External brake release signal	BRK-OFF	03h
Positioning complete output	INP	04h
At-velocity output	AT-SPEED	05h
Torque in-limit signal output	TLC	06h
Zero-speed detection output signal	ZSP	07h
Speed matching output	V-COIN	08h
Warning output1	WARN1	09h
Warning output2	WARN2	0Ah
Positional command ON/OFF output	P-CMD	0Bh
Positioning complete 2	INP2	0Ch
Speed in-limit output	V-LIMIT	0Dh
Alarm attribute output	ALM-ATB	0Eh
Velocity command ON/OFF output	V-CMD	0Fh
General purpose output 1	EX-OUT1	10h
set brake output (Note 1)	set brake	11h
Servo on status output	SRV-ST	12h
Position comparison output	CMP-OUT	14h
Deterioration diagnosis velocity output	V-DIAG	15h

(Note 1) “set brake output“ is reversal from logic of 60FEh/68FDh (digital output). When 60FEh is “1”, the output signal is “OFF” (brake is activate).

Cautions for output signal assignment

- For output signals, the same function can be assigned to multiple pins. However, the output logic setting must be the same. In addition, when using the same function for multiple control modes, the same output logic must be set. If different output logic was set, the output signal state will become unstable.
- For the output pins specified as disabled, output transistors are always turned off. However, EtherCAT communication response is not affected.
- Use only the values shown in the table above for setting.
- When using external brake release signal (BRK-OFF) or set brake output, the signal should be set in all control modes. If not applied to all control modes, Err 33.4 "Output function number error 1 protection" or Err 33.5 "Output function number error 2 protection" will occur.
- The output transistor is turned off when the control power is turned off, from when the driver module's control power is turned on until initialization is completed, during reset, and when the front display is in the following state:

Design your system so that this is not a problem.

- Depending on the operating status of the driver module, the control mode may be forcibly switched inside the driver module regardless of commands from the host device. This operation has an effect on output signal processing. Basically, assign the same function to one terminal in all control modes.

[Conditions that the control mode is switched forcibly inside the driver]

- When the frequency characteristic is measured by setup support software PANATERM for Multi. (Position loop characteristics mode is position control, the speed closed loop characteristic mode and torque speed (vertical) mode are speed control, torque speed (normal) mode is torque control.)
- Test run of the setup support software (Forcibly position control).
- The states that are written "Forcibly position control" in Section "6.3 Deceleration stop sequence".
- During retracting operation function (Forcibly position control) (Not supported)

- Output from the axis which is set as invalid in Pr0.20 "Axis limit setting" will be fixed to OFF regardless of the assignment setting.

2.5 Mechanical brake output

The mechanical brake release signal selected in Pr4.59 "Mechanical brake signal setting" is output from the mechanical brake output (BRK+/BRK-) of the driver module.

■ Relevant parameters

Class	No.	Attribute	Parameter name	Unit	Range	Function
4	59	B	Mechanical brake signal setup	-	0 to 2	Sets the mechanical brake release signal which is output from the mechanical brake output (BRK+/BRK-). 0: BRK-OFF 1: set brake 2: BRK-OFF or set brake

Pr4.59 "Mechanical brake signal setup" can be used to select the timings at which the brake connected to the mechanical brake output (BRK+/BRK-) is operated or released.

0: The brake is operated and released at the timing of BRK-OFF output.
1: The brake is operated and released at the timing of set brake output.
2: The brake is operated and released by the logical sum (or) of BRK-OFF output and set brake output.

- Operating the brake while the motor is rotating may cause the brake to be worn or damaged, and result in a damage to the motor bearing or encoder.
- Pr4.59 is a parameter of always effective attribute.When changing the setting value, employ caution not to cause abnormal operation of the brake.
- This parameter sets up the signal which is output from the mechanical brake output (BRK+/BRK-). It will not change the output signal from the I/O connector. To control the mechanical brake from the I/O connector, assign the desired brake release signal.

Depending on the setting in Pr4.59, the mechanical brake operates as described in the following table.

<table>
<tr><th rowspan="3">Pr4.59 (Mechanical brake signal setup)</th><th rowspan="3">Signal</th><th colspan="2">60FEh/68FDh (Digital outputs) setting value</th><th colspan="8">Output transistor state (BRK+/BRK-)</th></tr>
<tr><th rowspan="2">01h (Physical outputs)</th><th rowspan="2">02h (Bit mask)</th><th colspan="2">At reset</th><th colspan="2">At communication establishment</th><th colspan="2">At communication interruption</th><th colspan="2">At communication reestablishment</th></tr>
<tr><th>Servo OFF</th><th>Servo ON</th><th>Servo OFF</th><th>Servo ON</th><th>Servo OFF</th><th>Servo ON</th><th>Servo OFF</th><th>Servo ON</th></tr>
<tr><td rowspan="4">0</td><td rowspan="4">BRK-OFF</td><td>0</td><td rowspan="2">0</td><td rowspan="4">Hold</td><td rowspan="4">Release</td><td rowspan="4">Hold</td><td rowspan="4">Release</td><td rowspan="4">Hold</td><td rowspan="4">Release</td><td rowspan="4">Hold</td><td rowspan="4">Release</td></tr>
<tr><td>1</td></tr>
<tr><td>0</td><td rowspan="2">1</td></tr>
<tr><td>1</td></tr>
<tr><td rowspan="4">1</td><td rowspan="4">set brake</td><td>0</td><td rowspan="2">0</td><td colspan="8">Hold</td></tr>
<tr><td>1</td></tr>
<tr><td>0</td><td rowspan="2">1</td><td colspan="2" rowspan="2">Hold</td><td colspan="2">Release</td><td colspan="2" rowspan="2">Hold</td><td colspan="2">Release</td></tr>
<tr><td>1</td><td colspan="2">Hold</td><td colspan="2">Hold</td></tr>
<tr><td rowspan="4">2</td><td rowspan="4">BRK-OFF or set brake</td><td>0</td><td rowspan="2">0</td><td rowspan="4">Hold</td><td rowspan="4">Release</td><td rowspan="2">Hold</td><td rowspan="4">Release</td><td rowspan="4">Hold</td><td rowspan="4">Release</td><td rowspan="2">Hold</td><td rowspan="4">Release</td></tr>
<tr><td>1</td></tr>
<tr><td>0</td><td rowspan="2">1</td><td>Release</td><td>Release</td></tr>
<tr><td>1</td><td>Hold</td><td>Hold</td></tr>
</table>

- The external brake release signal (BRK-OFF) releases the mechanical brake at servo ON and operates the mechanical brake at servo OFF or in case of an error occurrence.

  Refer to

  Refer to the "10 Timing Chart"..

- set brake output (set brake) controls the mechanical brake by force from the controller side via the EtherCAT communication.It outputs the signal set up in 60FEh/68FDh(Digital outputs)bit0, and turns OFF the output transistor (operates the brake) when it is 1.
- For 60FEh / 68FDh (Digital outputs), refer to "REFERENCE SPECIFICATIONS Driver module section (SX-DSV03454)".

◆ **CAUTION**

- **If the mechanical brake is operated while the servo motor is rotating, the mechanical brake may become abnormally worn or damaged and result in equipment failure.**
- **Releasing the brake on the vertical axis may cause the equipment to fall due to its own weight. Be careful on its falling when releasing the brake.**
- **Operating the brake while the motor is rotating may cause the brake to be worn or damaged, and result in a damage to the motor bearing or encoder.**
- **Pr4.59 is a parameter of always effective attribute. When changing the setting value, employ caution not to cause abnormal operation of the brake.**
- **This parameter sets up the signal which is output from the mechanical brake output (BRK+/BRK-). It will not change the output signal from the I/O connector. To control the mechanical brake from the I/O connector, assign the desired brake release signal.**
- **Err17.0 "Mechanical brake circuit voltage protection" or Err17.1 "Mechanical brake circuit overload protection" will occur if an error occurs in the mechanical brake circuit.**

(Blank page)

3

Front Panel Specifications

3.1 Front panel configuration

Front panel cover opened

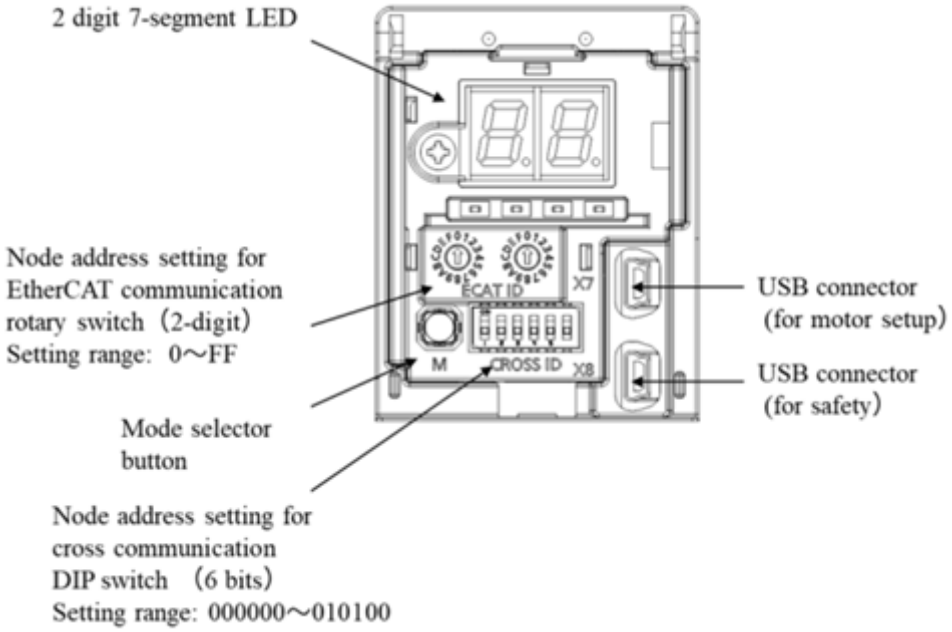

Front panel cover closed

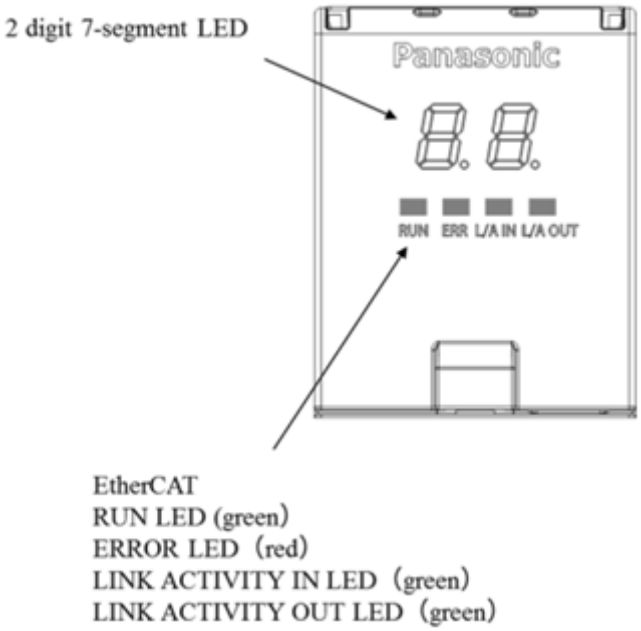

3.2 Node address setup in Inter-module communication

In MINAS A6 Multi, driver modules up to maximum number of connections are connected to one power supply module, and inter-module communication is used to exchange information between these modules. For maximum number of connections, refer to "REFERENCE SPECIFICATIONS Power supply module section (SX-DSV03452)".

In order to identify each driver module in this inter-module communication, the node address must be set to a different value using the DIP switch on the front panel of the driver module.

Also, parameter setting / change, monitoring, alarm confirmation, etc. of the power supply module can be performed through the USB, EoE communication connector only from the driver module with the node address set to 1.
Be sure to set the node address to 1 for one of the driver modules connected to the power supply module.

■ Setup procedure for node address in Inter-module communications

Assign a node address to each driver module and set it with the DIP switch. Switch the DIP switch ON / OFF and set in binary.

The setting range is 1 to 63. Do not set out of range.

If it is set outside the range, Err69.5 "Inter-module communication ID setting error protection" occurs.
Set the dip switch of each digit to OFF to set "0", and to ON to set "1".
The first digit on the right side (6 is printed) when viewed from the front.

(Configuration example)

When setting 5 (binary: 000101) for module address

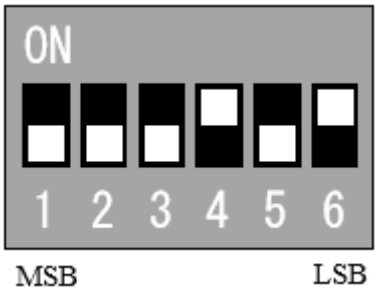

◆ CAUTION

- **Assign inter-module communication node addresses so that they do not overlap in each module. If it is duplicated, Err69.5 "Inter-module communication ID setting error protection" occurs.**
- **The inter-module communication node address of the power supply module is assigned to "0" at the time of shipment, and Err69.5 is always generated when the power is turned on as it is. Before use, assign a non-zero communication node address between modules.**
- **Dip switch setting changes are enabled when the control power is turned on.**

3.3 EtherCAT Station alias

EtherCAT Station alias can be set up by the following three methods.

- Reading the value of SII from Configured Station Alias

  Reading the value of 0004h(Configured Station Alias) in the SII from 0012h(Configured Station Alias) of ESC register.

- Reading the value of rotary switch from Configured Station Alias

  Reading the value made of object 3740h(Station alias setup(high)) and front panel rotary switch from 0012h(Configured Station Alias) of ESC register.

- Reading the value of rotary switch from AL Status Code (Explicit Device ID)

  Reading the value made of object 3740h(Station alias setup(high)) and front panel rotary switch from AL Status Code(0134h).

◆ REFERENCE

- **Please refer to "Technical document -EtherCAT communication specification-(SX-DSV03456)" for details.**

■ **Relevant parameters**

Class	No.	Attribute	Parameter	Setting range	Unit	Function
7	40	R	Station alias setting (upper)	0 to 255	-	Set the upper 8 bits of station alias.
7	41	R	Station alias selection	0 to 2	-	Defines the station alias setting method **Value** / **Function** 0: Setting by rotary switch on front panel, and by Pr7.40 will be station alias. 1: Value of SII area (0004h) will be station alias. 2: For manufacturer's use

3.4 EtherCAT Indicators

MINAS A6 Multi series has 4 types of EtherCAT indicators (LED).
There are 4 patterns of LED indication in addition to "ON" and "OFF".

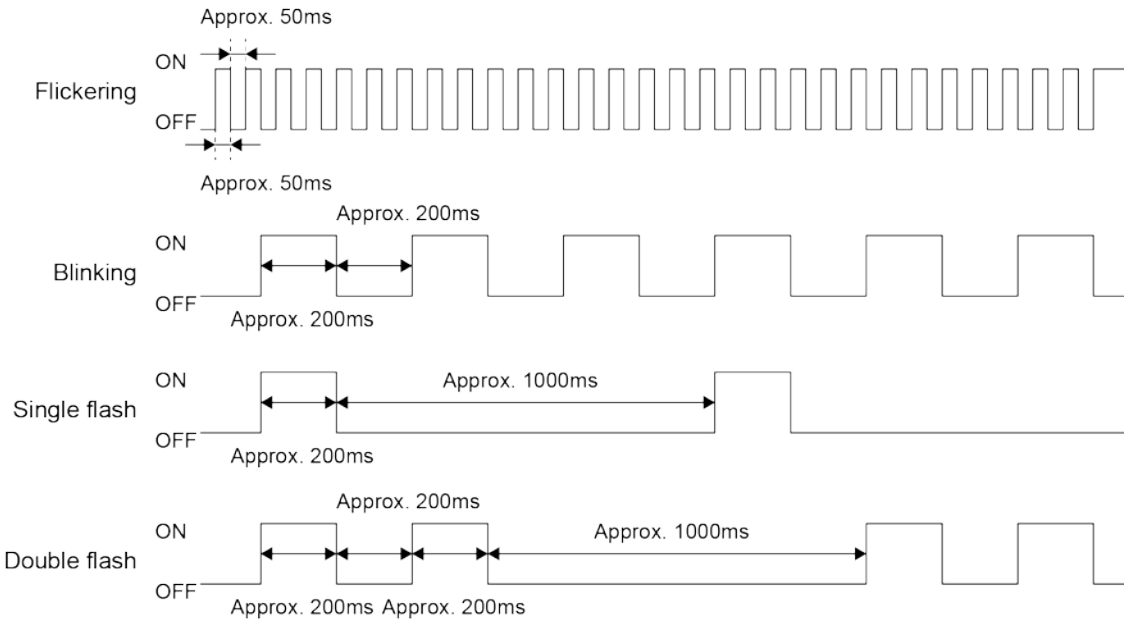

■ **RUN**

RUN indicator will show the status of ESM(EtherCAT State Machine).
Indication is lighted in green.

LED	Content
OFF	ESM:INIT
Blinking	ESM:Pre-Operational
Single flash	ESM:Safe-Operational
ON	ESM:Operational

■ **ERR**

ERR Indicator will show the state of the alarm defined by AL status code.
Indication is lighted in red.

LED	Content
OFF	With no generating of the alarm defined by AL Status code (Note 1)
Blinking	Communication setting error
Single flash	Syncronize event error
Double flash	Application watch dog time out
Flickering	Initialize error
ON	PDI error (Note 2)

(Note 1) "The alarm defined by AL status code" is which indicate Err80.0-7 and Err81.0-7, Err85.0-7 in the EtherCAT communication related error.

(Note 2) MINAS A6 Multi series is not detected.

■ L/A IN, L/A OUT

L/A IN, L/A OUT indicator will show the LINK status and operation status of Each port's physical layer. Indication is lighted in green.

LED	Content
OFF	LINK not established
Flickering	LINK established. There are data transmission and reception.
ON	LINK established. There are no data transmission and reception.

If the period until LINK establishment is too long, this phenomenon may be improved by the following measures.

- Changing bit11 (Auto MDI/MDI-X mode) in Pr7.22 "Communication function extended setup 1".
- Setting the Pr6.18 values of adjacent servo drivers to different values (example: 0.0 s and 0.1 s).

■ Relevant parameters

Class	No.	Attribute	Title	Range	Unit	Function
6	18	R	Power-up wait time	0 to 100	0.1 s	Set up the standard initialization time approx. 1.5 s + α(setting value×0.1s) after power-up. For example, in the case of the preset value 10, it is set to 1.5s+(10×0.1 s) = approx. 2.5s. Note If the period until LINK establishment is too long, this phenomenon may be improved by setting the Pr6.18 values for adjacent servo drivers to different values (for example, 0.0 s and 0.1 s).
7	22	R	Communication function extended setup 1	-32768 to 32767	-	bit11 : Auto MDI/MDI-X mode 0 : mode0 1 : mode1 Note If link establishing is late, it might be improved by changing the setting.

3.5 7-segment LED display

The 7-segment LED on the front panel has 3 information display modes.

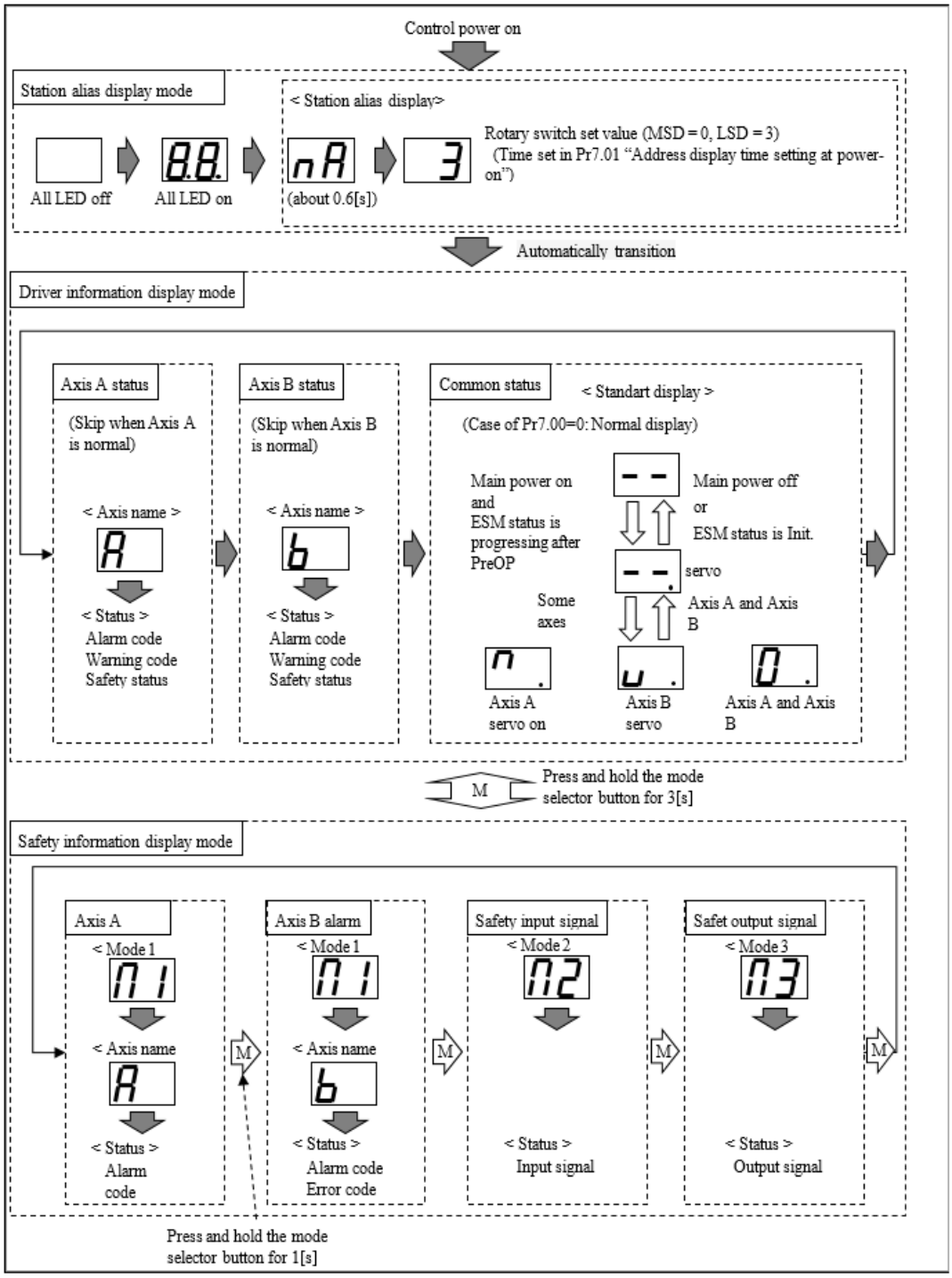

3.5.1 Station alias display mode

When the control power is turned on, the station alias value set in the rotary switch or SII area (0004h) is displayed.

After that, it automatically shifts to the driver information display mode.

■ **Relevant parameters**

Class	No.	Attribute	Title	Range	Unit	Function
7	01	R	Address display time upon power up	0 to 1000	100 ms	Sets Station alias(Lower) display time upon turning the control power ON. When the setting value is 0 to 6, it is processed in 600ms.

3.5.2 Driver information display mode

In this mode, the driver module servo-on, alarms, warnings, and other information are displayed. Driver information display mode consists of "Standart display", "Axis name display", and "Status display". You can switch to the safety information display mode by pressing and holding the push switch for 3 seconds.

Common status

■ **Standart display**

Monitor information is displayed based on the value set in Pr7.00 "LED display contents".

■ **Relevant parameters**

Class	No.	Attribute	Title	Range	Unit	Function
7	00	A	Information on LED	0 to 32767	-	Selects the information displayed on 7-SEG LED display.

Pr 7.00		Information on display	Remarks
Axis A	Axis B		
0 or 64		Normal display	--: servo OFF 00:servo ON The states of Axis A and Axis B are displayed. Refer to See the figure section "3.5 7-segment LED display".
1	65	Mechanical angle	Range: 0 to FFF hex. 0: zero position of 1 revolution data of encoder. Data increments as motor turns CCW. When the displayed value exceeds [FF], the count is reset to [0] and restarted. When the incremental encoder is used, upon turning the control power ON, [nF] (not Fixed) is displayed until zero position of the encoder is detected.
2	66	Electrical angle	Display range: 0 to FF hex. 0: the position where U phase induced voltage reaches the positive peak. Data increments as motor turns CCW. When the displayed value exceeds [FF], the count is reset to [0] and restarted.
4 or 68		Station alias value (Rotary switch setting)	Lower 8bits of station alias value that set by rotary switch at power ON is displayed. Station alias is 0 to F[hex], the display is one-digit. Station alias is upper than 10[hex], the display is two-digit. Rotary switch of the front panel is displayed.
5	69	Encoder Accumulated communication error counts	Display range: 0 to FF hex. Max. accumulated communication error counts: FFFF hex. Only the least significant byte is displayed. When the displayed value exceeds [FF], the count is reset to [00] and continue counting. Note Accumulated communication error counts will be cleared upon turning the control power OFF.
6	70	External scale Accumulated communication error counts	

(To be continued)

Pr 7.00		Information on display	Remarks
Axis A	Axis B		
7	71	External scale Z phase counter	When an incremental external scale is used in the full closed control, the Z phase counter value read from the external scale is displayed as 0 to F[hex]. When the incremental external scale is used in full closed control or in semi-closed control with the external scale position information monitor function enabled, displays the value of Z phase counter read from external scale: 0□F hex. Note • This displayed value is not affected by the value of Pr 3.26 Reversal of direction of external scale. This function is effective only in the case of the serial incremental external scale and in the external scale of the A/B/Z phase, "nA" (not Available) is indicated. When the external scale position information monitor function under semi-closed control is disabled, "nA" is indicated. • With the first edition of the software version (Ver1.01), under semi-closed control with the external scale position information monitor function enabled, "nA" is indicated.
10	74	Over load factor	Display range: 0 to FF hex. The ratio [%] to the rated load is displayed. If the Over load factor is100[%],"64" is displayed. If the Over load factor is larger than 255[%],"nA" (not Available) is displayed.
Other		-	Not use

Axis A status
Axis B status

When any of the alarm status, warning status, or STO status occurs on each axis of the driver module, the axis name and status information that occurred are displayed.

If there is no content to be displayed in the status information, it is not displayed.

The status display is classified into "Alarm display", "Warning display" and "Safety status display".

If multiple status information occurs at the same time, it is displayed according to the table below.

✓ : Active – : Inactive

Status			7-segment LED	
Alarm	Warning	STO	Axis name and status display order	Remarks
✓	✓	✓	Axis name → Alarm A 16 .0	Full blinking for Name of Axis Display and Status Display
✓	✓	-		
✓	-	✓		
✓	-	-		
-	✓	✓	Axis name → Warning → Safety Status A A1 St	The right dot on Status Display blinks
-	✓	-	Axis name → Warning A A1	
-	-	✓	Axis name → Safety Status A St	
-	-	-	(No axis name, no status display)	(Only standart display)

If status display information exists for multiple axes, the display will be in the following order.

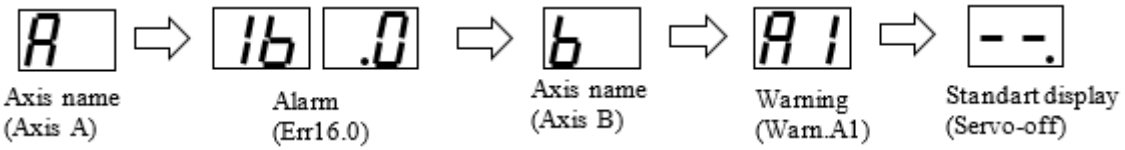

3.5.3 Safety information display mode

By pressing and holding the mode switch button for 3 seconds, you can switch between the driver information display mode and the safety information display mode.

In the safety information display mode, various information on the safety part of the driver module is displayed.

Refer to

For details on safety, refer to the "Safety Installation Manual (SX-DSV03514)" and "PANATERM for Safety Programming Manual (SX-DSV03508)".

By pressing the mode switch button for 1 second, you can switch the following four display contents.

Axis A alarm
Axis B alarm

The display is repeated in the order of below:
Mode display (about 2[s]) → Axis name (about 2[s]) → Alarm number

When the safety status is normal, alarm number is displayed "4" for about 2[s].
When an safety error/alarm occurs, the error code / alarm code is displayed one digit at a time, followed by a one-digit alphabet (F / A / E) indicating the type of error / alarm.

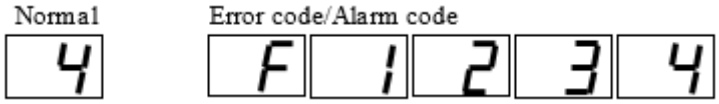

Refer to

For alarm number display, also refer to the technical document "PANATERM for Safety Programming Manual (SX-DSV03508)".

Safety input signal
Safety output signal

The display is repeated in the order of below:
Mode display (about 2[s]) → Signal name (about 2[s]) → Signal level (about 2[s])

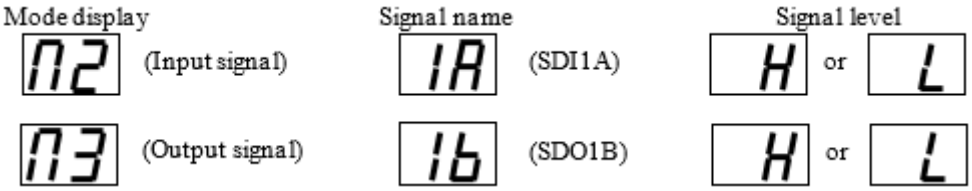

While the signal name or signal level is displayed, the signal name can be switched by pressing the mode switch button for 0.1 [s].

(Safety input signals)
SDI1A → SDI1B → SDI2A → SDI2B → SDI3A → SDI3B → SDI4A → SDI4B → SDIN

(Safety output signals)
SDO1A → SDO1B → SDO2A → SDO2B → BRKO1A → BRKO1B → BRKO2A → BRKO2B

4

Basic Functions

4.1 Rotational direction setup

Polarity (Rotational direction) can be set up to position command / velocity command / torque command, and each offset.
In the MINAS A6 Multi series, the rotational direction cannot be set by Pr0.00 (Rotational direction setting), but it can be set by the object 607Eh (Polarity) specified to CoE (CiA402).

Refer to

Please refer to "TECHNICAL REFERENCE EtherCAT Communication Specification (SX-DSV03456)" for details of object 607Eh/687Eh (Polarity).

Setting value	Contents
0	No reverse of sign of objects related to torque, velocity, and position
224	Reverse of sign of objects related to torque, velocity, and position
Other than above	Not supported (Do not set)

In addition, object 607Eh/687Eh (Polarity) is not what replaced parameter Pr0.00(Rotational direction setting) as it was, it becomes effective when performing the following data transfer between a CoE (CiA402) process division and a motor control process division.

Instructions / setting	607Ah/687Ah (Target position) 60B0h/68B0h (Position offset) 60FFh/68FFh (Target velocity) 60B1h/68B1h (Velocity offset) 6071h/6871h (Target torque) 60B2h/68B2h (Torque offset)
Monitor	2304h/2704h (Position command internal value [after filtering]) 6062h/6862h (Position demand value) 6064h/6864h (Position actual value) 606Bh/686Bh (Velocity demand value) 606Ch/686Ch (Velocity actual value) 6074h/6874h (Torque demand) 6077h/6877h (Torque actual value) 6078h/6878h (Current actual value)
External input	60FDh/68FDh (Digital input) bit1(positive limit switch [POT]) 60FDh/68FDh (Digital input) bit0(negative limit switch [NOT]) External input (POT/NOT)

The setting of 607Eh/687Eh (Polarity) is reflected on data on the setup support tool PANATERM for Multi, in addition to the above data.
And the settings of 607Eh/687Eh (Polarity) is reflected on POT/NOT during execution by PANATERM for Multi including test run function, frequency response analyzing function and Z phase search function.

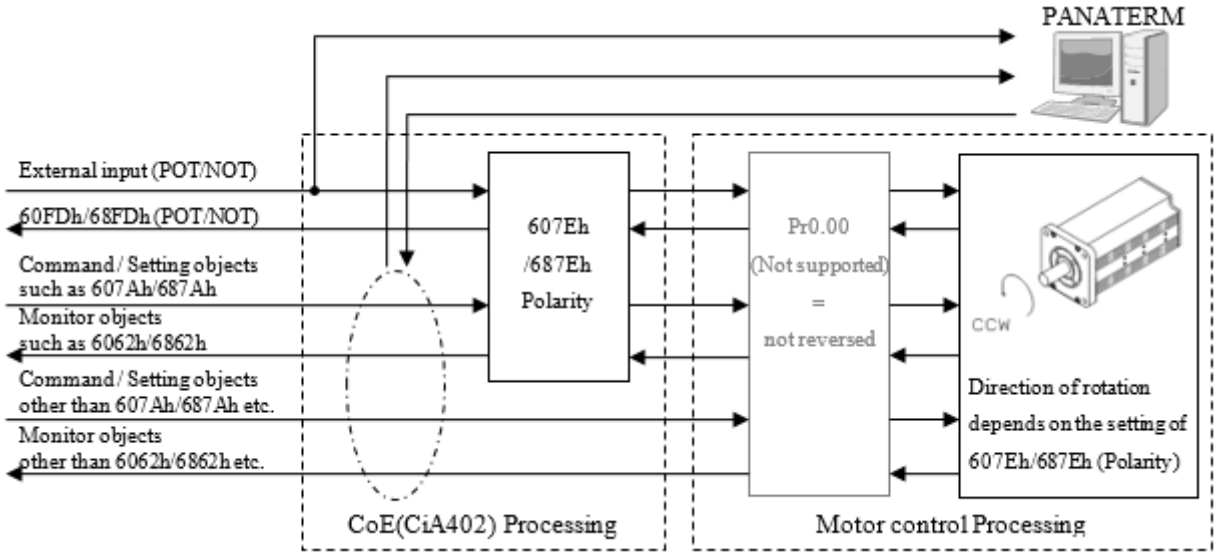

4.2 Position control

The driver module performs position control following the EtherCAT communication object position command input from the host controller. Below describes the basic settings necessary for position control.

The control mode is switched forcibly inside the driver module depending on its operating status irrespective of the command from the host controller.

■ **Conditions that the control mode is switched forcibly inside the driver**

- When the frequency characteristic is measured by setup support software PANATERM for Multi. (Position loop characteristics mode is position control, the speed closed loop characteristic mode and torque speed (vertical) mode are speed control, torque speed (normal) mode is torque control.)
- Test run of the setup support software (Forcibly position control).
- The states that are written "Forcibly position control" in Section "6.3 Deceleration stop sequence".
- During retracting operation function (Forcibly position control) (Not supported)

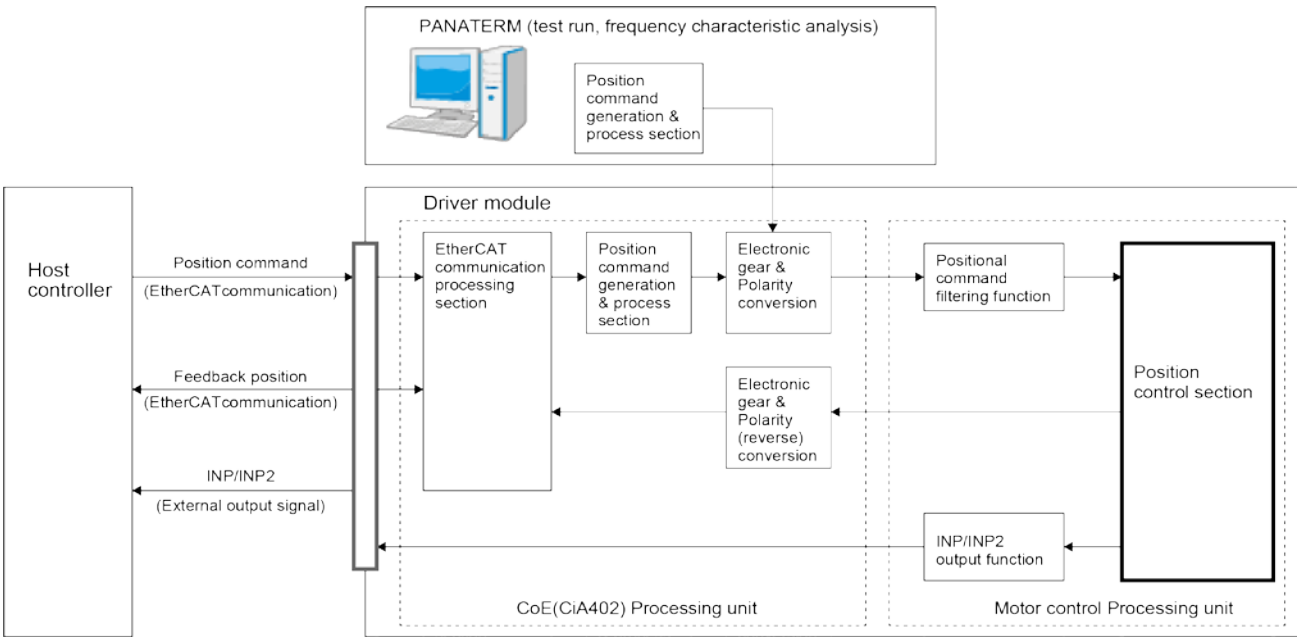

4.2.1 Process of command pulse input

Positional command is input based on the EtherCAT communication object.

As position control modes, Profile position control (pp), Cyclic position control (csp) and Homing position (hm) are available. Interpolated position (ip) is not supported.

Refer to

For details, refer to "TECHNICAL REFERENCE EtherCAT Communication Specification (SX-DSV03456)".

4.2.2 Electronic gear function

The electronic gear is a function which makes the value which multiplies by the electronic gear ratio defined by the object to the position command from host controller as the position command to a position control section. By using this function, the number of revolutions and travel of the motor per command can be set to the desired value.

In MINAS A6 Multi series, a setup of an electronic gear ratio with a parameter Pr0.08(Number of command pulses per motor revolution), Pr0.09(Numerator of electronic gear) and Pr0.10(Denominator of electronic gear) has not supported, an electronic gear ratio is set up by the object 608Fh/688Fh(Position encoder resolution [Axis A]), 6091h/6891h(Gear ratio [Axis A]) and 6092h/6892h(Feed constant [Axis A]) specified to CoE(CiA402).

The equation below calculates the relationship between the unit (command) defined by the user and internal unit (pulse):

$$\text{Electronic gear ratio} = \frac{\text{Position encoder resolution} \times \text{Gear ratio}}{\text{Feed constant}}$$

Position demand value x Electronic gear ratio = Position demand internal value

NOTE

- **Electronic gear ratio is valid only within the range of 8000 times to 1/1000 times.When the range is exceeded, the value is saturated in the range, and Err88.3 (Improper operation error protection) occurs.**
- **When the denominator or numerator exceeds the unsigned 64-bit size in the calculation process of electronic gear ratio, Err88.3 (Improper operation error protection) occurs.**
- **When the denominator or numerator exceeds the unsigned 32-bit size in the final calculation result of electronic gear ratio, Err88.3 (Improper operation error protection) occurs.**
- **Set the electronic gear ratio with several objects. An error may become large depending on the combination of settings.**
- **608Fh/688Fh-01h (Encoder increments) is automatically set according to encoder resolution.Under full-closed control, it is also automatically set according to encoder resolution. The default value of 6092h/6892h-01h (Feed) is set so that the electronic gear ratio is 1:1 when a 23-bit/r encoder is used.**
  When using other encoders than a 23-bit/r encoder, pay attention to the electronic gear ratio settings.
- **The electronic gear ratio setting is reflected at the following timing. Pay attention that the setting is not reflected to behavior just by only changing setting value of related objects.**
  - **At the time of the control power supply ON**
  - **When establishing communication (when changing ESM state from Init to PreOP)**
  - **When returning to origin is completed**
  - **When clearing absolute multi-turn from PANATERM for Multi or EtherCAT communication**
  - **When PANATERM for Multi operation(test run function, frequency response analyzing function, Z phase search, fit gain) is completed.**
  - **When execute pin assign by PANATERM for Multi.**
  - **When Err27.4 (Command error protection) occurs**
- **In the position information initialization when Init to PreOp in the absolute mode, make a setting so that the value of "Absolute encoder position [pulse/unit]/Electronic gear ratio" is in the range from -2^{31} (-2147483648) to $+2^{31}-1$ (2147483647). Operation outside this range is not guaranteed. Check the operation range of the absolute encoder position and the electronic gear ratio.**

- **The unit of the movement amount setting of the test run function by the setup support tool PANATERM for Multi is [command unit].**
- **Communication cycle setup at 125 µs or 250 µs is supported only if the electronic gear ratio is 1:1. Err88.3 (Improper operation error protection) occurs when the electronic gear ratio is other than 1:1.**
- **Communication cycle setup at 500 µs is supported only if the electronic gear ratio is a power of 2. Err88.3 (Improper operation error protection) occurs when the electronic gear ratio is other than a power of 2.**
- **Err88.3 (Improper operation error protection) occurs if the TxPDO size for either Axis A or Axis B is set larger than 25 bytes while the communication cycle is 500 µs and the electronic gear ratio is a power of 2.**
- **Err88.3 (Improper operation error protection) occurs if the RxPDO size for either Axis A or Axis B is set larger than 25 bytes while the communication cycle is 500 µs and the electronic gear ratio is a power of 2.**
- **MINAS A6 Multi has a combination of settings that cannot be partially supported. See the table below for details.**

Operation mode	Electronic gear ratio	Single axis PDO size [byte]		Communication cycle [us]					
		RxPDO	TxPDO	125	250	500	1000	2000	4000
semi-closed or full-closed	1	≤6	≤6	✓	✓	✓	✓	✓	✓
		7–32	7–32	✕ (Err88.3)	✕ (Err88.3)	✓	✓	✓	✓
semi-closed	2 ^ n (n=Integer from 1-12)	≤25	≤25	✕ (Err88.3)	✕ (Err88.3)	✓	✓	✓	✓
		26–32	26–32	✕ (Err88.3)	✕ (Err88.3)	✕ (Err88.3)	✓	✓	✓
	1/1000–8000 (Other than 1 and 2 ^ n)	≤32	≤32	✕ (Err88.3)	✕ (Err88.3)	✕ (Err88.3)	✓	✓	✓
	Other than those above	≤32	≤32	✕ (Err88.3)	✕ (Err88.3)	✕ (Err88.3)	✕ (Err88.3)	✕ (Err88.3)	✕ (Err88.3)

Refer to

For details, refer to "TECHNICAL REFERENCE EtherCAT Communication Specification (SX-DSV03456)".

Electronic gear setting example

■ **Under semi-closed control, When setting the electronic gear ratio of axis A by setting the number of command pulses per motor revolution**

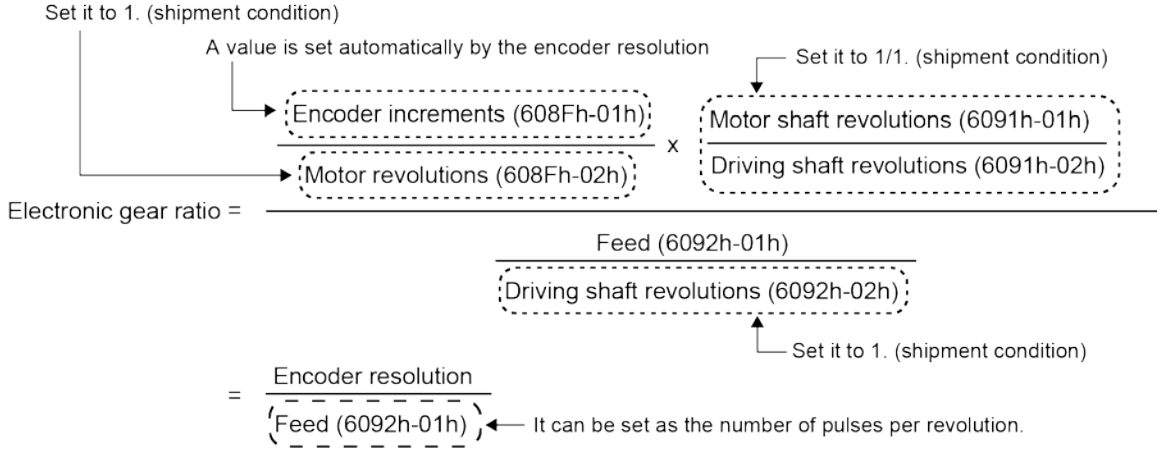

608Fh-01h (Encoder increments) is set automatically from the connected encoder resolution.
By setting 608Fh-02h (Motor revolutions), 6091h-01h (Motor shaft revolutions), 6091h-02h (Driving shaft revolutions) and 6092h-02h (Driving shaft revolutions) to 1 (shipment condition), it is possible to set 6092h-01h (Feed) as the "number of command pulses per motor revolution".

■ **Under semi-closed control or full-closed control, When setting the electronic gear ratio of axis A by setting the electronic gear numerator/denominator**

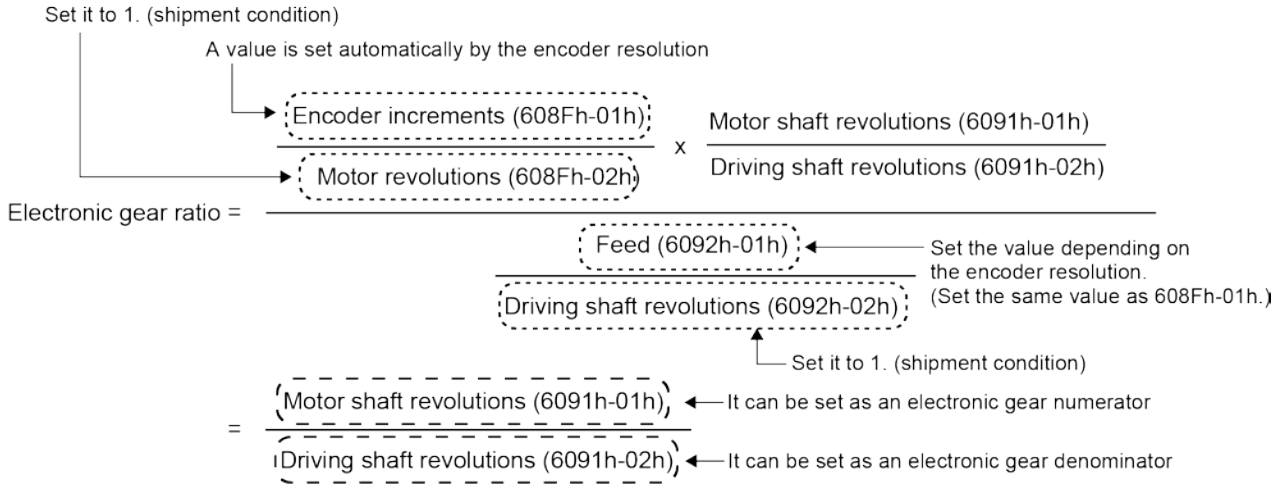

608Fh-01h (Encoder increments) is set automatically from the connected encoder resolution.
By setting 6092h-01h (Feed) to the encoder resolution (the same value as 608F-01h (Encoder increments), and in the case of the 23bit/r encoder, the shipment condition) and setting 608Fh-02h (Motor revolutions) and 6092h-02h (Driving shaft revolutions) to 1 (shipment condition), it is possible to set 6091h-01h (Motor shaft revolutions) to the "electronic gear numerator" and 6091h-02h (Driving shaft revolutions) to the "electronic gear denominator".

Backup of electronic gear set value

The electronic-gear-related objects (6091h/6891h-01h, 6091h/6891h-02h, 6092h/6892h-01h and 6092h/6892h-02h) are backup target objects.
It is recommended to execute a backup (writing into EEPROM) after a change.
By executing a backup, it will be unnecessary to change setting each time when the control power is turned on.

Refer to

As for the backup method, refer to "TECHNICAL REFERENCE EtherCAT Communication Specification (SX-DSV03456)".

Electronic gear setting and backup by object editor

It is possible to set and back up objects using the object editor of PANATER (USB communication).

When the PANATERM for Multi connect by the EoE communication, it can not be write objects using the object editor.
For the MINAS A6 Multi series, the setting values by using the object editor are reflected to actual objects,and setting of electronic gear ratio is reflect to actual behavor at following timing same as previously via EtherCAT:

- At the time of the control power supply ON.
- When establishing communication (when changing ESM state from Init to PreOP).
- When returning to origin is completed.
- When clearing absolute multi-turn from PANATERM for Multi or EtherCAT communication.
- When PANATERM for Multi operation(test run function, frequency response analyzing function, Z phase search, fit gain) is completed.
- When execute pin assign by PANATERM for Multi.

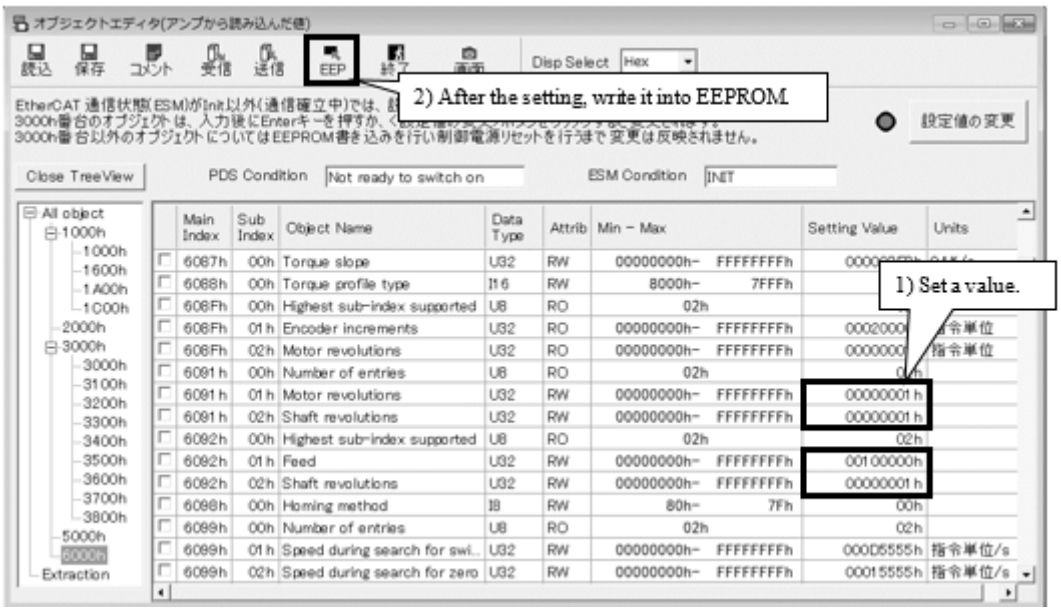

4.2.3 Positional command filtering function

To smooth the positional command processed by the electronic gear, set the command filter.

■ **Relevant parameters**

Class	No.	Attribute	Title	Range	Unit	Function
2	22	B	Positional command smoothing filter	0 to 10000	0.1 ms	Set up the time constant of the 1st delay filter in response to the positional command. With the two-degree-of-freedom control, it functions as the command response filter. ▼ Refer to For the details, refer to "5.2.16 Two-degree-of-freedom control mode (with position control)" and "5.2.17 Two-degree-of-freedom control mode (with velocity control)" and "5.2.18 Two-degree-of-freedom control mode (with full-closed control)".
2	23	B	Positional command FIR filter	0 to 10000	0.1 ms	Set up the time constant of the FIR filter in response to the positional command

Pr 2.22 Positional command smoothing filter

During conventional control, when a square wave command for the target speed Vc is applied, set up the time constant of the 1st delay filter as shown below. Set the time constant for the command filter during 2 degrees of freedom control.

▼ Refer to

For details, refer to
"5.2.16 Two-degree-of-freedom control mode (with position control)"
"5.2.17 Two-degree-of-freedom control mode (with velocity control)"
"5.2.18 Two-degree-of-freedom control mode (with full-closed control)".

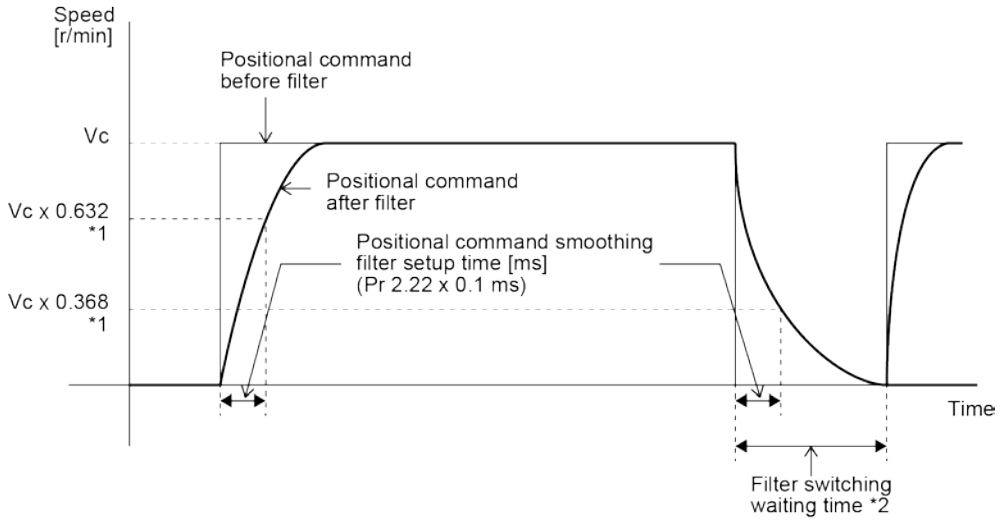

*1 Actual filter time constant (setup value x 0.1 ms) has the maximum absolute error of 0.4 ms for a time constant below 100 ms and the maximum relative error of 0.2% for a time constant 20 ms or more.

*2 Switching of Pr 2.22 Positional command smoothing filter is performed on the rising edge of the command with the number of command pulses/0.125 ms is changed from 0 to a value other than 0 while the positioning complete is being output.
Even if the control mode is changed to position control after Pr2.22 (Positional command smoothing filter) setting is changed during velocity control or torque control, the setting is not changed.
If the filter time constant is decreased and positioning complete range is increased, and a many number of pulses are accumulated in the filter (the area equivalent of "value of positional command before filter–value of positional command after filter" integrated over the time), at the time of switching, these pulses are discharged at a higher rate, causing the motor to return to the previous position—the motor runs at a speed higher than the command speed for a short time.

*3 Even if setting of Pr2.22 (Positional command smoothing filter) is changed, it is not immediately applied to the internal calculation. If the switching as described in *2 occurs during this delay time, the change of Pr2.22 will be suspended.

Pr2.23 Positional command FIR filter

When a square wave command of target speed Vc is applied, set up the Vc arrival time as shown in the figure below.

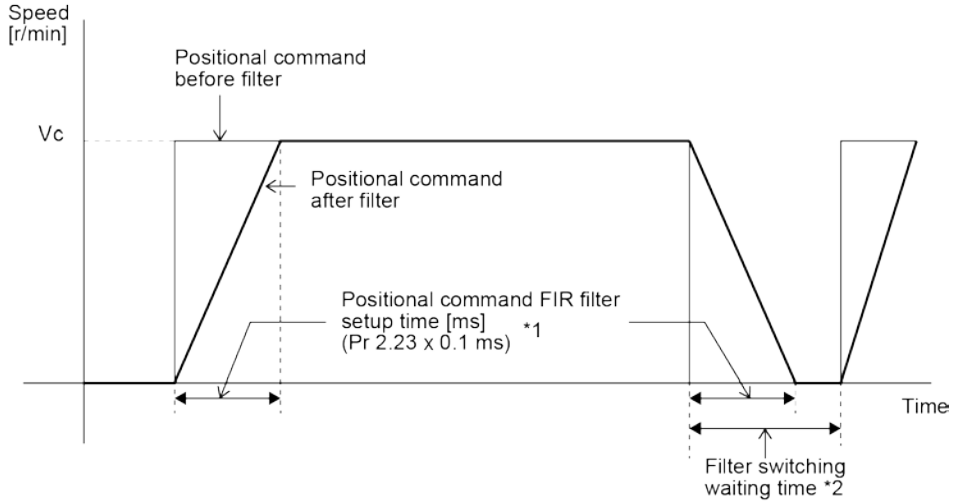

*1 The actual average travel time (setup value x 0.1 ms) has the maximum absolute error of 0.2 ms for a time constant below 10 ms and the maximum relative error of 1.6% for a time constant 10 ms or more.

*2 When changing the setting of Pr2.23 (Positional command FIR filter), stop the command pulse and wait until the filter switching wait time has elapsed. The filter switching wait time will be setup value x 0.1 ms + 0.25 ms when the setup time is below 10 ms, or setup value x 0.1 ms x 1.05 when the setup time is over 10 ms. If Pr 2.23 is changed during the command pulse is being input, the change is not reflected until the command pulse-less state has continued for the filter switching wait time. Change will be reflected after the control power reset.

*3 Even if setting of Pr2.23 (Positional command FIR filter) is changed, it is not immediately applied to the internal calculation. If the switching as described in *2 occurs during this delay time, the change of Pr2.23 will be suspended.

When the positional command is trapezoidal wave, its waveform will be shaped to S at the output of the filter.

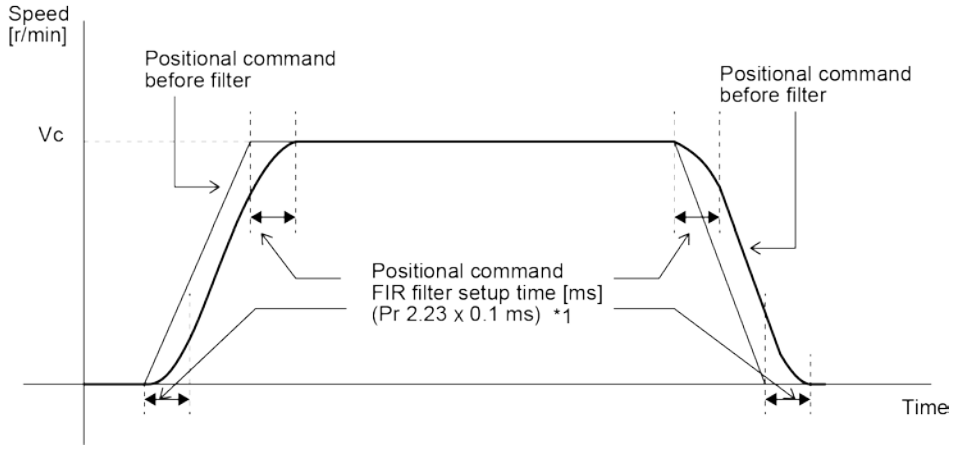

4.2.4 Positioning complete output (INP/INP2) function

The completion of positioning can be verified by the positioning complete output (INP) or the positioning complete output 2 (INP2).

When the absolute value of the positional deviation counter at the position control is equal to or below the positioning complete range by the parameter, the output is ON. Presence and absence of positional command can be specified as one of judgment conditions.

The calculation methods (standard) of a position deviation differ as follows according to the setting for the command position deviation output switching (bit 14) of Pr7.23 "Communication function Extended setup 2".

Pr7.23 bit14=0: Deviation with respect to command input after positional command filter
Pr7.23 bit14=1: Deviation with respect to command input before positional command filter

However, it becomes available when Pr5.20(Position setup unit select) is 0.

NOTE

- **The “positional deviation” written in this section is that of the motor control process part (on PANATERM for Multi), not 60F4h (Following error actual value) on the EtherCAT communication.**

The details of how to calculate the position deviation are shown in the figure below.

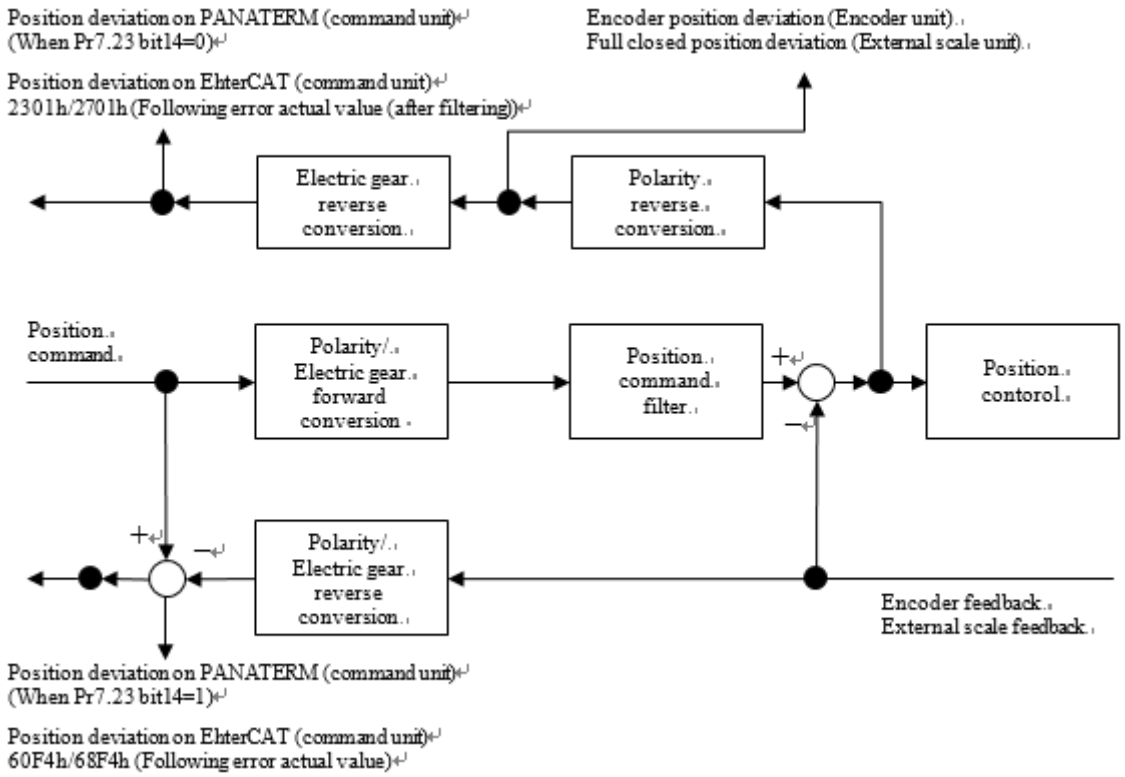

■ Relevant parameters

Class	No.	Attribute	Title	Range	Unit	Function
4	31	A	Positioning complete (In-position) range	0 to 2097152	Command unit	Set the threshold of positional deviation with respect to the output of positioning complete signal (INP). The unit of shipment setting is [Command unit], but it can be changed to [Encoder unit] or [External scale unit] by Pr5.20(Position setup unit select).In this case, the unit of Pr0.14 is changed too, please attention. The positional deviation value can be changed to after or before position command filter by Pr7.23 bit14.
4	32	A	Positioning complete (In-position) output setup	0 to 10	-	Select the condition to output the positioning complete signal (INP). Whether or not positional commands are set is judged by the command after the positional command filter in the case of settings 1 to 5, and the command before the positional command filter in the case of 6 to 10. For the value of the position deviation it is possible to switch before or after the position command filter by Pr7.23 bit14. 0: The signal will turn on when the positional deviation is smaller than Pr 4.31 (Positioning complete range) 1, 6: The signal will turn on when there is no position command and the positional deviation is smaller than Pr 4.31 (Positioning complete range). 2, 7: The signal will turn on when there is no position command, the zero-speed detection signal is ON and the positional deviation is smaller than Pr 4.31 (Positioning complete range). 3, 8: The signal will turn on when there is no position command and the positional deviations smaller than Pr 4.31 (Positioning complete range). Subsequently, ON state is maintained until Pr 4.33 INP hold time has elapsed. After the hold time, INP output will be turned ON/OFF according to the coming positional command or condition of the positional deviation. 4, 9: Positioning completion decision starts in a delay time specified by Pr4.33 after a change from "With command" to "Without command". The signal turns on if position command is not received and position deviation is not larger than Pr4.31. 5, 10: After "With position command" changes to "Without position command" and then the positional deviation enters the positioning complete range, positioning completion decision is started upon the elapse of the positioning determination delay time specified for Pr4.33 "INP hold time". The signal turns on when there is no position command and the positional deviation is equal to smaller than Pr 4.31 "Positioning complete range".
4	33	A	INP hold time	0 to 30000	ms	• Set up the hold time when Pr 4.32 = 3, 8. 0: The hold time is maintained definitely, keeping ON state until the next positional command is received. 1 to 30000: ON state is maintained for setup time (ms) but switched to OFF state as the positional command is received during hold time. • Becomes positioning detection delay time when Pr4.32 = 4, 5, 9, 10. 0: Positioning detection delay time becomes 0, and positioning completion decision is started immediately upon a change from "With position command" to "Without position command". 1 to 30000: Positioning decision start time is delayed by a setting value [ms]. If a position command is received during the delay time, the delay time is reset. When the position command becomes 0, the delay time starts to be measured starting from 0.

(To be continued)

Class	No.	Attribute	Title	Range	Unit	Function
4	42	A	Positioning complete (In-position) range 2	0 to 2097152	Command unit	Set the threshold of positional deviation with respect to the output of positioning complete (INP) signal. The INP2 turns ON whenever the positional deviation is lower than the value set up in this parameter, without being affected by Pr 4.32 Positioning complete output setup. (Presence/ absence of positional command is not related to this judgment.) The unit of shipment setting is [Command unit], but it can be changed to [Encoder unit] or [External scale unit] by Pr5.20(Position setup unit select).In this case, the unit of Pr0.14 is changed too, please attention. The positional deviation value can be changed to after or before position command filter by Pr7.23 bit14.
5	20	C	Position setup unit select	0 to 1	-	Specify the unit to determine the range of positioning complete and excessive positional deviation. 0: Command unit 1: Encoder unit(External scale unit) Note Positioning complete (6041h bit10 [Target reached]) detection threshold of EtherCAT communication status is always in terms of command unit regardless of the setting of this parameter.
7	23	B	Communication function extended setup 2	-32768 to 32767	-	bit14: Position deviation [command unit] output setting 0: Internal command position (after filtering) [command unit] – Actual positon [command unit] 1: Internal command position (before filtering) [command unit] – Actual position [command unit]

4.2.5 Pulse regeneration function (Not supported)

MINAS A6 Multi does not supporte pulse regeneration function.

4.3 Velocity control

The driver module performs speed control following the EtherCAT communication object speed command input from the host controller. Below describes the basic settings necessary for speed control.

As the speed control mode, there is a Profile velocity control(pv) and Cyclic synchronous velocity control(csv).

Refer to

For details, refer to "TECHNICAL REFERENCE EtherCAT Communication Specification (SX-DSV03456)".

The control mode is switched forcibly inside the driver module depending on its operating status irrespective of the command from the host device. This operation has an effect on input signal processing.

■ Conditions that the control mode is switched forcibly inside the driver

- When the frequency characteristic is measured by setup support software PANATERM for Multi. (Position loop characteristics mode is position control, the speed closed loop characteristic mode and torque speed [vertical] mode are speed control, torque speed [normal] mode is torque control.)
- Test run of the setup support software (Forcibly position control).
- The states that are written "Forcibly position control" in Section "6.3 Deceleration stop sequence".
- During retracting operation function (Forcibly position control) (Not supported)

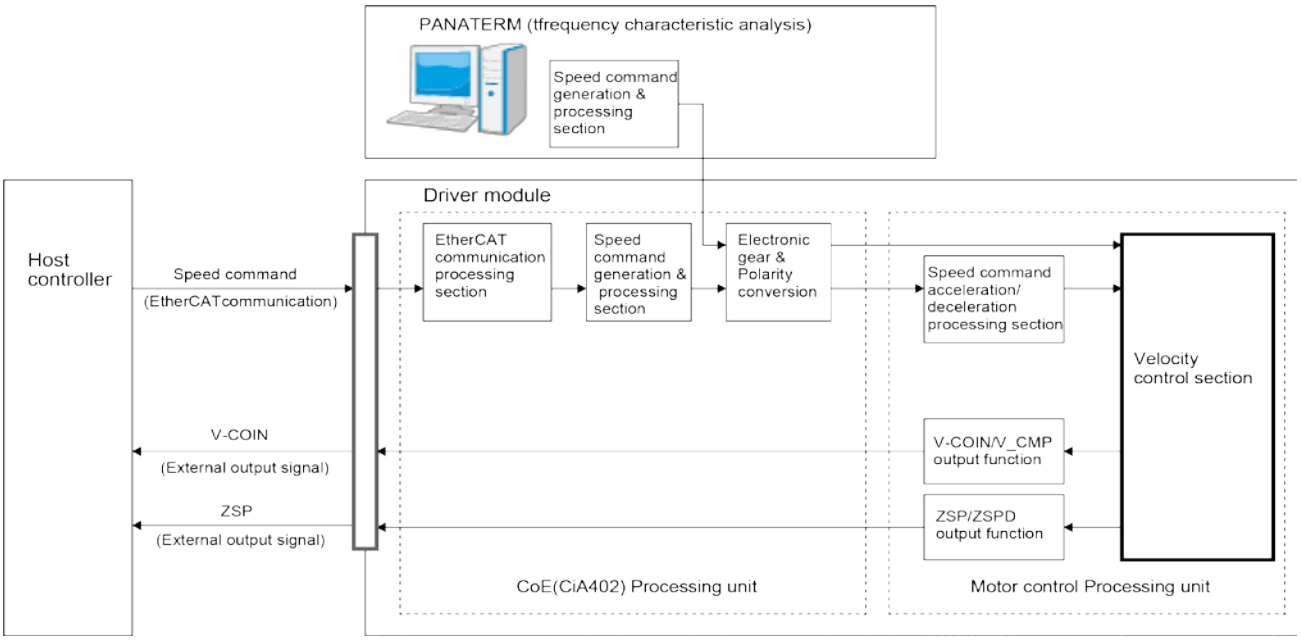

4.3.1 Attained speed output (AT-SPEED)

The AT-SPEED signal is output as the motor reaches the speed set to Pr 4.36 "Attained speed".

■ **Relevant parameters**

Class	No.	Attribute	Title	Range	Unit	Function
4	36	A	At-speed (Speed arrival)	10 to 20000	r/min	Set the detection timing of the speed arrival output (AT-SPEED). When the motor speed exceeds this setup value, the speed arrival output (AT-SPEED) is output. Detection is associated with 10 r/min hysteresis.

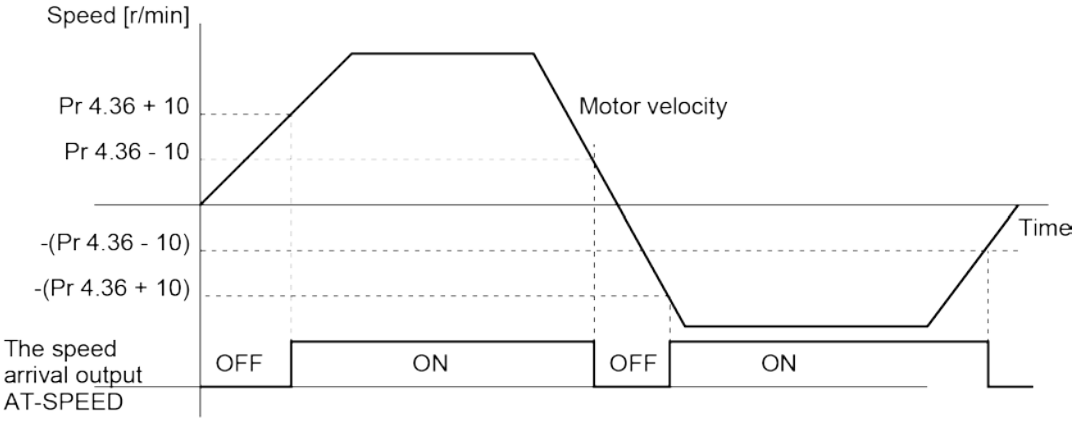

4.3.2 Speed coincidence output (V-COIN)

This signal is output when the motor speed is equal to the velocity specified by the velocity command. The motor speed is judged to be coincident with the specified speed when the difference from the velocity command before/after acceleration/deceleration is within the range specified by Pr 4.35 “Speed coincident range”.

■ **Relevant parameters**

Class	No.	Attribute	Title	Range	Unit	Function
4	35	A	Speed coincidence range	10 to 20000	r/min	Set the speed coincidence (V-COIN) output detection timing. Output the speed coincidence (V-COIN) when the difference between the speed command and the motor speed is equal to or smaller than the speed specified by this parameter. The detection response has 10 r/min hysteresis.

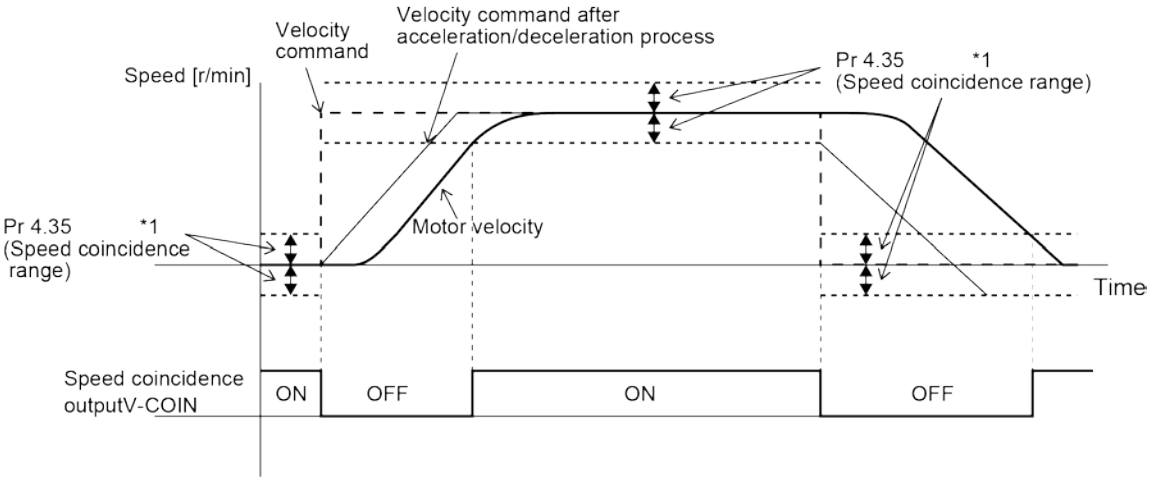

*1 Because the speed coincidence detection is associated with 10 r/min hysteresis, actual detection range is as shown below.
- Speed coincidence output OFF to ON timing = (Pr 4.35 – 10) r/min
- Speed coincidence output ON to OFF timing = (Pr 4.35 + 10) r/min

4.3.3 Velocity command acceleration/deceleration setting function

This function controls the velocity by adding acceleration or deceleration command in the driver to the input velocity command.
Using this function, you can use the soft start when inputting stepwise velocity command or when using internal velocity setup. You can also use S shaped acceleration/deceleration function to minimize shock due to change in velocity.

■ **Relevant parameters**

Class	No.	Attribute	Title	Range	Unit	Function
3	12	B	Acceleration time setup	0 to 10000	ms/ (1000 r/min)	Set up acceleration processing time in response to the velocity command input.
3	13	B	Deceleration time setup	0 to 10000	ms/ (1000 r/min)	Set up deceleration processing time in response to the velocity command input.
3	14	B	Sigmoid acceleration/deceleration time setup	0 to 1000	ms	Set S-curve time for acceleration/deceleration process when the velocity command is applied.

◆ **NOTE**

- **When the position loop is external to the driver module, do not use the acceleration/deceleration time setting. Set these values to 0.**

Pr 3.12 “Acceleration time setup”
Pr 3.13 “Deceleration time setup”

Set the time, elapsing before the velocity command (stepwise input) reaches 1000 r/min after a stepwise velocity command is input, to Pr 3.12 "Acceleration time setup". Also set the time, elapsing before the velocity command reaches 0 r/min from 1000 r/min, to Pr 3.13 "Deceleration time setup". Assuming that the target value of the velocity command is Vc (r/min), the time required for acceleration/deceleration can be computed from the formula shown below.

- Acceleration time (ms) = Vc/1000 x Pr 3.12 x 1 ms
- Deceleration time (ms) = Vc/1000 x Pr 3.13 x 1 ms

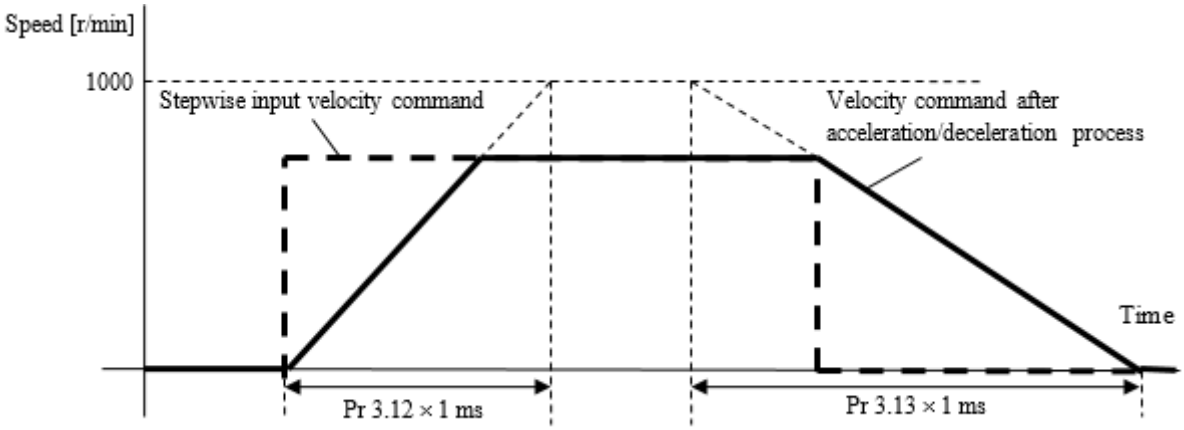

Pr 3.14 “Sigmoid acceleration/deceleration time setup”

According to Pr 3.12 "Acceleration time setup" and Pr 3.13 "Deceleration time setup", set up sigmoid time with time width centering the inflection point of acceleration/deceleration.

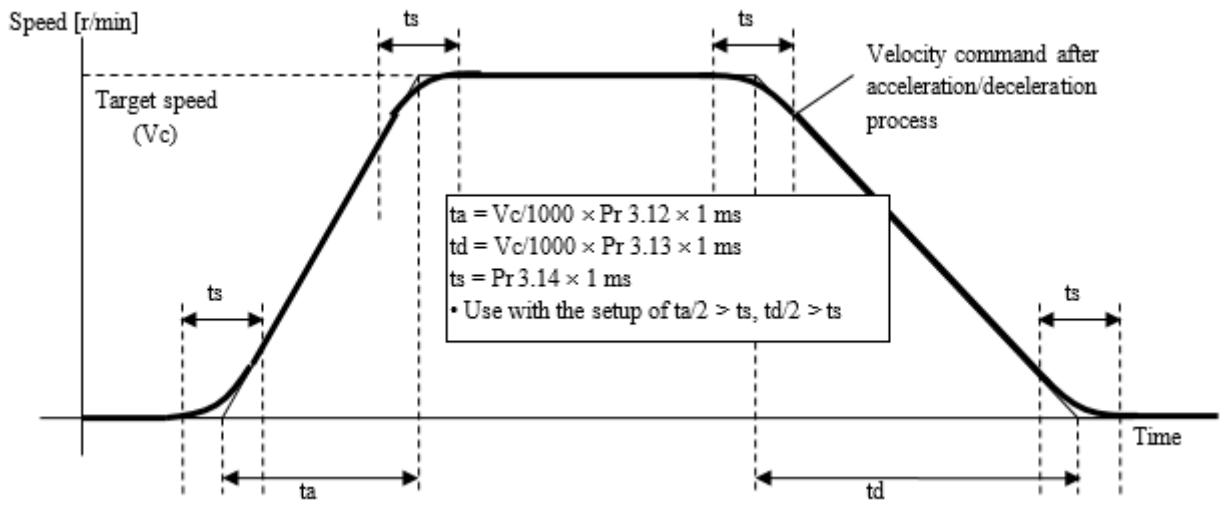

4.4 Torque control

Torque control is performed based on the torque command object of the EtherCAT communication which is input from the host controller.

This describe the basic configuration when using the torque control. Torque control is required speed limit command in addition to the torque command. Control the rotational speed of the motor so that the value does not exceed the speed limit.

◆ **NOTE**

- **When a torque command is given so that 0 is routed through like a positive value to negative value or negative value to positive value while torque filter is valid, torque may not be controlled according to the torque slope and torque filter settings.**

As torque control mode, there is a Profiles torque control (tq) and Cyclic synchronous torque control (cst).

Refer to

For details, refer to "TECHNICAL REFERENCE EtherCAT Communication Specification (SX-DSV03256)".

The control mode is switched forcibly inside the driver depending on its operating status irrespective of the command from the host device. This operation has an effect on input signal processing.

■ Conditions that the control mode is switched forcibly inside the driver

- When the frequency characteristic is measured by setup support software PANATERM for Multi. (Position loop characteristics mode is position control, the speed closed loop characteristic mode and torque speed [vertical] mode are speed control, torque speed [normal] mode is torque control.)
- Test run of the setup support software (Forcibly position control).
- The states that are written "Forcibly position control" in Section "6.3 Deceleration stop sequence".
- During retracting operation function (Forcibly position control) (Not supported)

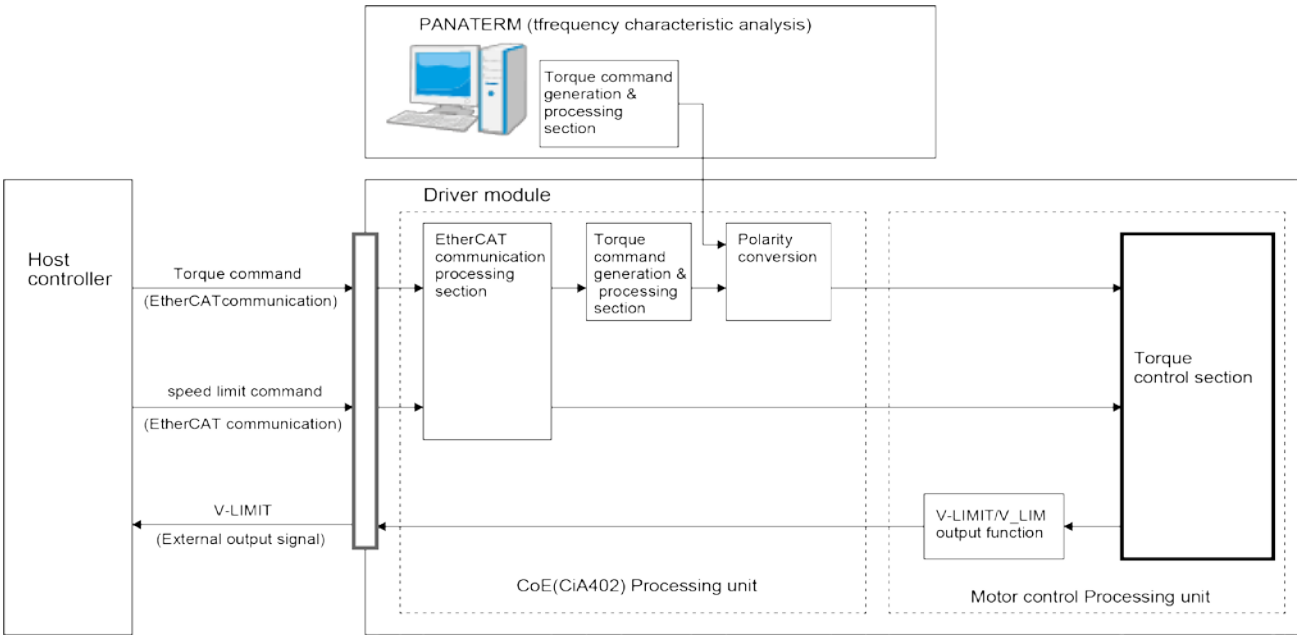

4.4.1 Speed limit function

The speed limit is one of protective functions used during torque control.

This function regulates the motor speed so that it does not exceed the speed limit while the torque is controlled.

◆ **NOTE**

- **While the speed limit is used to control the motor, the torque command applied to the motor is not directly proportional to the torque command from host controller.The torque command applied to the motor becomes the torque that the speed-controlled so that the motor speed becomes the speed limit value.**
- **If the motor runs in the direction opposite to the one specified by the torque command given by the host controller due to disturbance including gravity, the speed will not be within the limit.If this matters, set the speed at which the motor needs to be stopped in Pr5.13 (over-speed level setting) or Pr6.15 (2nd over-speed protection level setting), so that Err26.0 (over-speed protection) or Err26.1 (2nd over-speed protection) is caused to happen in order to stop the motor.For details on over-speed protection, refer to the section "6.3.5 Emergency stop upon occurrence of alarm".**

■ **Relevant parameters**

<table>
<tr><th>Class</th><th>No.</th><th>Attribute</th><th>Title</th><th>Range</th><th>Unit</th><th>Function</th></tr>
<tr><td>3</td><td>17</td><td>B</td><td>Speed limit select</td><td>2</td><td>-</td><td>Set up the selection method of the speed limit used for torque control mode.
<table>
<tr><th>Setting value</th><th>Speed limit value</th></tr>
<tr><td>2</td><td>6080h (Max motor speed)</td></tr>
</table>
With this driver module, it becomes 2 fixation.</td></tr>
</table>

4.5 Full-closed control

Full-closed control is where the position of the unit being controlled is controlled by direct feedback of the detected position using an externally located scale (external scale).

This allows, for example, control that is not affected by ball screw errors or position variation from temperature. Configuring a full-closed control system will enable the achievement of high-precision positioning of sub-micrometer order.

Full-closed control mode is works in position control mode (profile position control [pp], cyclic position control [csp], homing [hm]). Interpolated position control (ip) is not supported.

If 6060h (Modes of operation) is set to 3 (pv), 4 (tq), 9 (csv), and 10 (cst) under full-closed control, Err88.1 (Control mode setting error protection) occurs.

It is not possible that switching to velocity control mode (profile velocity control [pv], cyclic velocity control [csv]) or torque control mode (profile torque control [tq], cyclic torque control [cst]) under full-closed control.

This section describes the setting of external scale ratio and the setting of excessive hybrid deviation in the initial setting for full-closed control.

◆ CAUTION

- **One command pulse(one command unit) of when the command division/multiplication ratio is 1:1 becomes as one pulse of external scale.With the full-closed control, the velocity control is implemented by the encoder feedback, and the position control by the external scale feedback.**
- **Make sure to set Pr3.28 "Hybrid deviation excess setup" and Pr3.29 "Hybrid deviation clear setup" to appropriate values.When the hybrid deviation excess range is set excessively wide, detection becomes delayed, and the effects of error detection become lost. Please refer to "4.5.3 Setting of hybrid deviation excess" for details.**
  Also, if set excessively narrow the torsion between motor and equipment in normal operation may be detected as an abnormal.
- **The external scale of 1/40 ≤ External scale ratio ≤ 125200 is recommended.When the external scale rate is set at the value smaller than 50/position loop gain (Hz), control by the unit of 1 pulse in external scale may not become possible.If the external scale ratio is increased, the operating noise may become louder.**
- **When a wrong external scale division ratio is set, even if the external scale and motor position agree with each other, the Err25.0 "Hybrid deviation excess error protection" may occur especially when the stroke distance is long with the movement. In that case, use with the external scale division ratio set to a value that is as close as possible, and the hybrid deviation excess range expanded.**
- **Full-closed control cannot be used in 0.250 ms and 0.125 ms of communication cycles. If 0.250 ms and 0.125 ms of communication cycles are set under full-closed control, Err91.1 (Command error protection) occurs.**

4.5.1 Selection of external scale type

This section describes the selection of external scale type to be used and sets the direction.

■ Relevant parameters

Class	No.	Attribute	Title	Range	Unit	Function
3	23	R	External scale selection	0 to 6	-	Selects the type of external scale.. 0: A, B phase output type 1: Serial communication type (Incremental specification) 2: Serial communication type (Absolute specification) 3 to 6: For manufacturer's use When the A/B phase output type is connected, if the value is set to 1, 2 or 6, Err50.0 "External scale connection error protection" occurs. Also, when the serial communication type is connected, if the value is set to 0, Err55.0-55.2 "A-phase or B-phase or Z-phase connection error protection" occurs. Err.93.3 "external scale connection error protection" occurs if 1 is set when a serial communication type scale of absolute specification is connected, if 2 or 6 is set when a serial communication type scale of incremental specification is connected, or if 3, 4 or 5 is set as the setting value regardless of the type of scale connected.
3	26	B	Reversal of direction of external scale	0 to 3	-	Sets the direction inversion of the external scale feedback counter. 0: Non-inversion 1: Inversion 2: For manufacturer's use (Note 1) 3: For manufacturer's use (Note 1)

(Note 1) Do not set up the setting range 2 to 3, as it can only be used by the manufacturer.

Pr3.23	External scale type	Supporting scale manufacturers	Supporting velocity (Note 3)
0	A/B phase output type (Note 1) (Note 2) (Note 4)	External scale of A/B phase output type	to 4M pulse/s (after 4 multiplications)
1	Serial communications type (increment specification) (Note 2) (Note 4)	Magnescale Co., Ltd. Nidec Sankyo Corporation	to 4G pulse/s
2	Serial communications type (absolute specification) (Note 2) (Note 4)	Mitutoyo Corporation Magnescale Co., Ltd. Heidenhain K.K. Renishaw K.K. Fagor Automation S.Coop	to 4G pulse/s

(Note 1) The counting direction of driver internal processing on the A/B phase output type external scale is shown in the table below.

Pr3.26	Count-down direction	Count-up direction
0: Non-in version	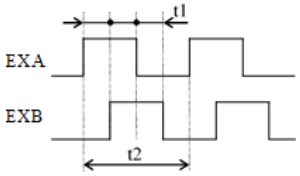 EXB is retarded 90° than EXA t1 > 0.25 µs t2 > 1.0 µs	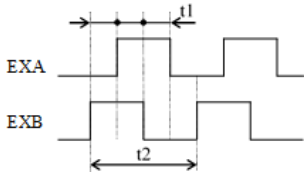 EXB is advanced 90° than EXA t1 > 0.25 µs t2 > 1.0 µs
1: Inversi on	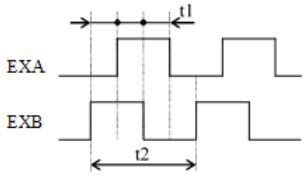 EXB is advanced 90° than EXA t1 > 0.25 µs t2 > 1.0 µs	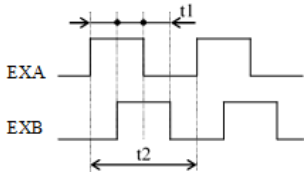 EXB is retarded 90° than EXA t1 > 0.25 µs t2 > 1.0 µs

(Note 2) For the direction of external scale connection, make sure to connect so that the scale counting direction becomes as the count-up when the motor axis is rotated to the CCW direction, and as the count-down when the motor shaft is rotated to the CW direction. If the above mentioned directions are not possible depending on the installation conditions and others, the scale counting direction can be inverted using Pr3.26 "Reversal of direction of external scale".

The installation direction can be checked PANATERM for Multi(USB communication, EoE communication),by checking the counting directions of external scale feedback pulse summation and encoder feedback pulse summation. When they are in agreement, the connection is established correctly. If they do not match, invert the set value of Pr3.26 "Reversal of direction of external scale" (0 to 1 or 1 to 0).

(Note 3) Supporting velocity means the feedback speed [pulse/s] of external scale that can be processed in the driver side.For the information on available range in the scale side, please check in the specification sheet for the scale.For example, when using a serial communication type external scale having the resolution of 1 nm, the maximum speed is 4 m/s. Even with the full-closed control, the overspeed protection occurs if the motor axis rotation speed exceeds the maximum speed.

(Note 4) Others, please contact the Company for supporting external scales.

4.5.2 Setting of external scale division ratio

This section describes the setting of division ratio with encoder resolution and external scale resolution.

■ Relevant parameters

Class	No.	Attribute	Title	Range	Unit	Function
3	24	R	Numerator of external scale divison	0 to 2^{23}	-	Sets the numerator of external scale division setting. When the set value = 0, the operation is performed with the encoder resolution used as the division numerator.
3	25	R	Denominator of external Scale divison	1 to 2^{23}	-	Sets the denominator of external scale division setting.

- Check the encoder pulse count per one motor rotation and the external scale pulse count per one motor rotation, then set the numerator of external scale division (Pr3.24) and denominator of external scale division (Pr3.25) so that the equation below becomes true.

Example) With 10mm ball screw pitch, 0.1μm/pulse scale, 23-bit (8,388,608pulse/r) encoder resolution

$$\frac{\text{Pr3.24}\ \boxed{8388608}}{\text{Pr3.24}\ \boxed{100000}} = \frac{\text{Encoder pulse count per one motor rotation [pulse]}}{\text{External scale pulse count per one motor rotation [pulse]}}$$

- If the ratio is incorrect, the difference increases between the position calculated from encoder pulse and the position calculated from external scale pulse, and the hybrid deviation excess error protection occurs especially when the movement distance is long.
- When Pr3.24 is set to 0, the encoder resolution is automatically set as the numerator.

4.5.3 Setting of hybrid deviation excess

The difference between the motor (encoder) position and load (external scale) position is detected, and when the difference exceeds Pr3.28 "Hybrid deviation excess setup", the hybrid deviation excess error protection is activated.

The hybrid deviation excess occurs mainly when there is an external scale error, external scale connection fault, and motor-load connection looseness.

■ **Relevant parameters**

Class	No.	Attribute	Title	Range	Unit	Function
3	28	C	Hybrid deviation excess setup	1 to 2^{27}	Command unit	Sets the allowance (hybrid deviation) between the motor (encoder) position and load (external scale) position on a command basis.
3	29	C	Hybrid deviation clear setup	0 to 100	Rotation	Each time the motor rotates for the amount of this set value, the hybrid deviation is cleared to zero. When the set value is zero, the hybrid deviation is not cleared.

Regarding hybrid deviation clear specification

Each time the motor rotates for the amount set with Pr3.29 "Hybrid deviation clear setup", the hybrid deviation is cleared to zero. By this function, operation becomes possible even with uses with which an accumulation of hybrid deviation occurs due to slippage or other reasons.

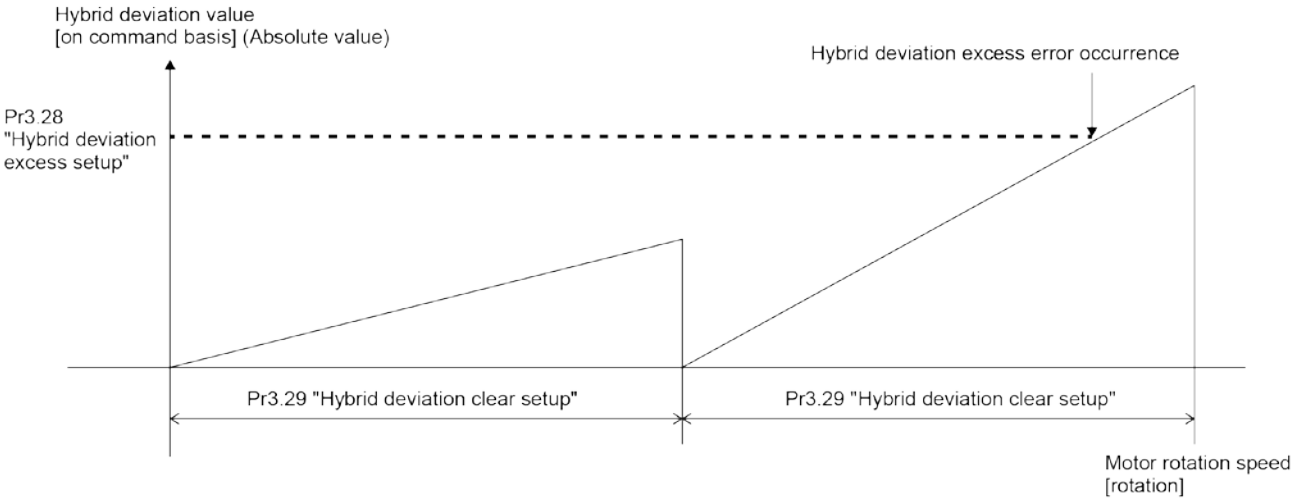

(Note) The rotation speed for hybrid deviation clear setting is detected by the use of encoder feedback pulse.

◆ **NOTE**

- **When using the hybrid deviation clear, make sure to set the Pr3.29 "Hybrid deviation clear setup" to an appropriate value. If set to a significantly smaller value compared with the set value of Pr3.28 "Hybrid deviation excess setup", this function may not work correctly as a protection against an abnormal operation caused by improper connection of external scale or others. When using, pay close attention to safety, and install a limit sensor or implement other means.**

Other than the above, hybrid deviation is cleared when the following position information is initialized:

- When turning on the power of the absolute system
- When establishing communication (when changing ESM state from Init to PreOP)
- When completing returning to home
- When completing the execution of the functions below by the setup support software (PANATERM for Multi)
  Test run function, Z phase search function, frequency response analyzing function (FFT), fit gain function, pin assignment setting, multi-turn clearing of the absolute encoder
- When Err27.4 (Command error protection) occurs

4.5.4 Full-closed control function (Rotary scale) (Not supported)

MINAS A6 Multi does not support pulse regeneration function.

4.6 Setting regenerative resistor

This function has been moved to the power supply module.

Refer to

Refer to section "11.4.2 Regenerative control function"

4.7 Absolute setup

4.7.1 Absolute encoder

When using the motor with absolute encoder, you can compose an absolute system, which does not require executing a homing operation at power-ON. For that, it is necessary to set Pr0.15 (Absolute encoder setup) to other than "1" and connect the battery for absolute encoder.

◆ REFERENCE

- **For details of the single-turn absolute function, refer to section "6.6 Single-turn absolute function". In this case, the connection of the battery is not required.**
- **For details of the continuous rotating absolute encoder function, refer to section 6.6Single-turn absolute function**

■ **Relevant parameters**

Class	No.	Attribute	Title	Range	Unit	Function
0	15	C	Absolute encoder setup	0 to 4	-	Sets the method of using the absolute encoder. (Note 1) 0: Use under absolute system (Absolute mode). 1: Use under incremental system (Incremental mode). (Note 2) Detection of the following protection functions is disabled. Err40.0 "Absolute system down error protection" Err41.0 "Absolute counter over error protection" Err42.0 "Absolute over-speed error protection" Err45.0 "Absolute multi-turn counter error protection" 2: Use under absolute system (Absolute mode) but multi-rotation counter overflow is ignored 3: Use under absolute system, however not use the multi-turn counter (single-turn absolute mode) (Note 2) 4: Use under absolute system (Absolute mode) but the upper limit value of the multi-rotation counter can be set to any value. Multi-rotation counter overflow is also ignored.(continuous rotation absolute mode) Note Set this to 0 for full-closed control function (Rotary scale).

(Note 1) During full-closed controlling, treated as an incremental encoder (setting value = 1) for internal control.

(Note 2) Do not refer to the read value of multi-turn data in increment mode and single-turn absolute mode. Multi-turn data can be confirmed with the monitor screen and wave form graphic screen of PANATERM and the object 2341h-02h of EtherCAT.

Refer to the table below for the necessity/unnecessity of connecting the absolute data battery with Pr0.15 “Absolute encoder setting”.

Absolute encoder type	Pr0.15 "Absolute encoder setup"	
	0, 2, 4	1, 3
With battery	Necessary	Unnecessary
Battery-less	Unnecessary	

Structure of absolute system

■ Absolute system configuration using EtherCAT communication interface (Example: with driver module 2-axes connection)

In the EtherCAT communication response (driver to host controller), the absolute data is transferred to the host controller as the current position data.

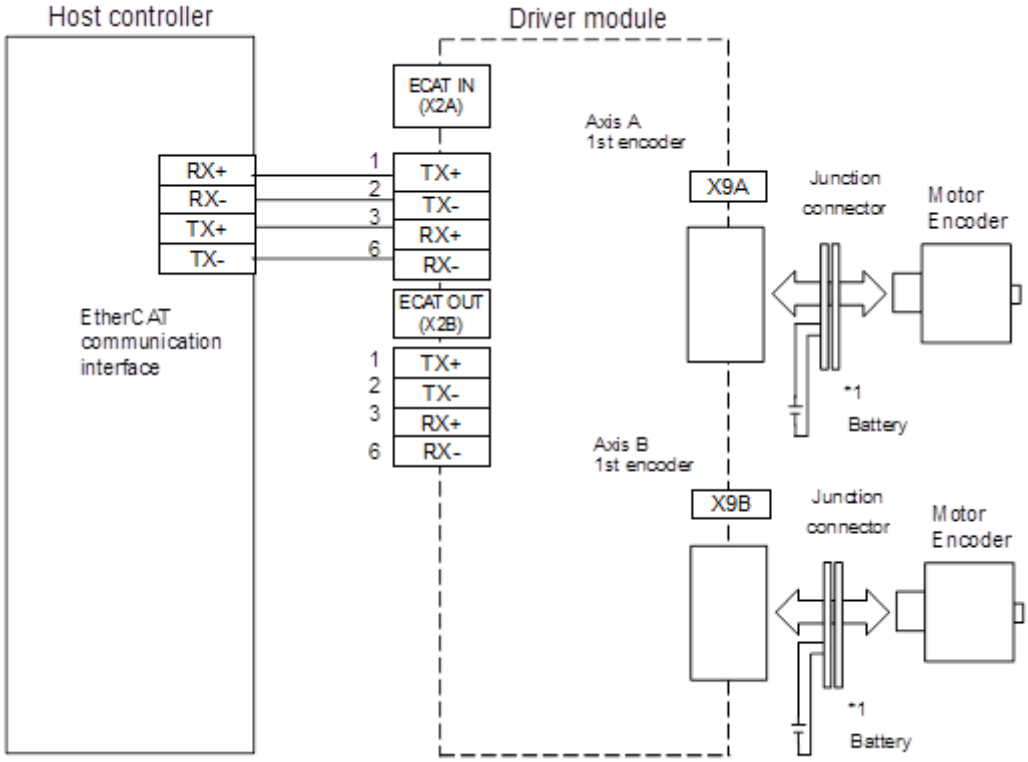

*1 When connecting the battery, connect it to the junction connector on either the connector X9A/X9B side or the encoder side. Do not connect to both.

Note

During replacing the battery, the control power input must be held ON. If not so, the absolute data will be lost.

Installing battery for absolute data

Refer to "REFERENCE SPECIFICATIONS Driver module section (SX-DSV03454)".

Clearing of absolute data

Multi-turn data of the absolute data is hold by the battery.

Therefore, when you start up the machine for the first time, it is required to make the multi-turn data to 0 by encoder clearing at the home position after installing the battery.

Clearing operation of absolute encoder is made through PANATERM for Multi(USB communication, EoE communication) or EtherCAT communication. After clearing the absolute data, turn OFF and ON the control power.

For information about clearing via PANATERM for Multi(USB communication, EoE communication), refer to the operating manual of PANATERM for Multi.

For information about clearing via EtherCAT communication, refer to "TECHNICAL REFERENCE EtherCAT Communication Specification (SX-DSV03456)".

Battery refreshment of the absolute encoder with battery

If batteries (lithium-thionyl chloride battery) are not discharged for a long time, including long storage, battery alarm may occur due to the phenomenon of transient voltage drop at the next discharge. In order to prevent this, you can perform battery discharge treatment (refreshment).

Battery refreshment is performed by PANATERM for Multi(USB communication, EoE communication).

NOTE

- **When battery refreshment is executed, battery warning may occur. In that case, clear the battery warning.**
- **Do not refresh the battery with a batteryless absolute encoder.**

4.7.2 External scale

Under full-closed control, an absolute system that does not require return to origin action after power-up, can be configured.

External scale absolute system configuration

■ **Absolute system configuration using EtherCAT communication interface (Example: with driver module 2-axes connection)**

In the EtherCAT communication response (driver to host controller), the absolute data is transferred to the host controller as the current position data.

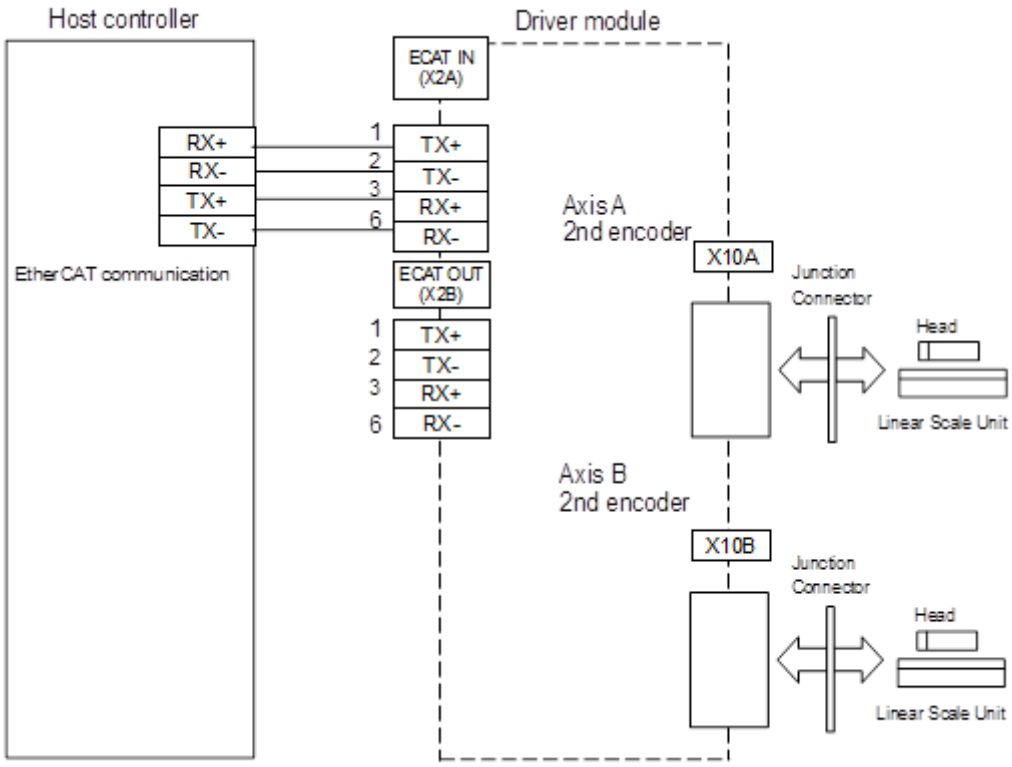

4.8 External scale position information monitor function (Not supported)

MINAS A6 Multi does not support external scale position information monitor function under semi-closed control.

5

Auto Tuning Functions

5.1 Automatic adjusting function

The figure below shows outline of automatic adjusting function of MINAS A6 Multi series.

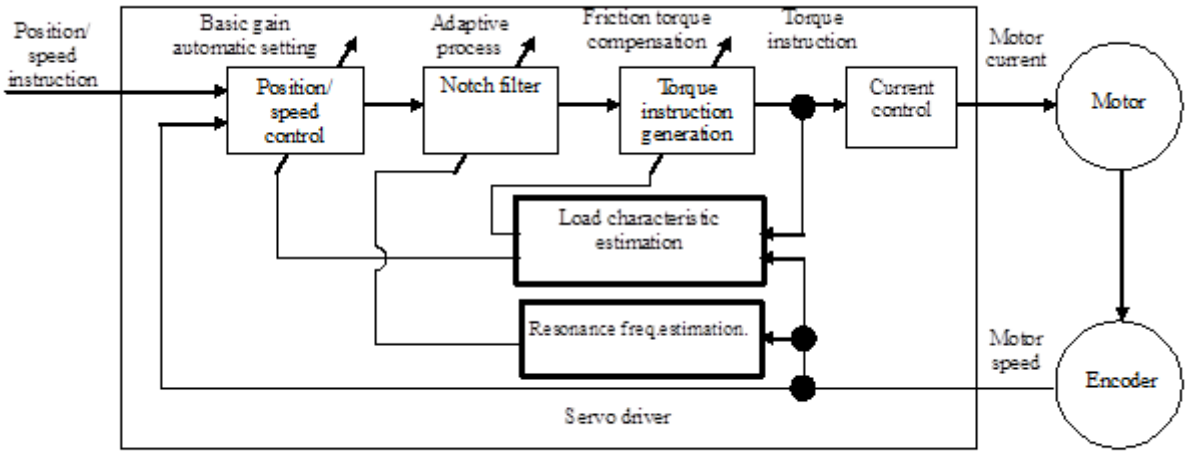

■ **Real-time auto tuning**

Estimates the load characteristics based on the motor velocity and torque command, and automatically sets up the basic gain related to position and velocity control, based on estimated inertia. Also estimates the friction torque at the same time and adds the estimated value to the torque command to shorten positioning settling time.

■ **Adaptive filter**

Estimates the resonance frequency based on the motor velocity and removes the frequency components from torque command to prevent resonant oscillation.

5.1.1 Real-time auto tuning

The system estimates the load characteristics in real time, and automatically performs basic gain setting and friction compensation by referring to stiffness parameter.

Refer to

For the 2 degrees of freedom control mode, refer to section "5.1.3Real-time auto tuning (Two-degree-of-freedom control mode standard type)", "5.1.4 Real-time auto tuning (Two-degree-of-freedom control mode synchronization type)".

Applicable range

This function operates under the following conditions.

Real-time auto-tuning condition:

Control Mode	• Specific Real-time auto tuning mode is selected according to the currently active control mode. For details, refer to the description of Pr 0.02 Real-time auto tuning setup.
Others	• Should be in servo-on condition • Parameters except for controls such as torque limit setup, are correctly set, assuring that the motor can run smoothly.

Caution

- After the power is turned on, estimate value following may become quicker regardless of Pr6.31 "Real time auto tuning estimation speed" until operation data effective for the estimation of load characteristics is sufficiently accumulated.
- When real-time auto-gain tuning is effective, an estimate value may become abnormal due to disturbance. If you want to obtain stable operation from when the power is turned on, it is recommended to disable the real-time auto-gain tuning.

Real-time auto-gain tuning may not be executed properly under the conditions described below. If not properly executed, change the loading condition or operating pattern, or manually set up the relevant parameters by referring to the manual adjustment function description.

Conditions which obstruct Real-time auto-gain tuning action:

Load inertia	• The load inertia is too small or large compared to the rotor inertia. (less than 3 times or more than 20 times). • The load inertia changes too quickly. • The machine stiffness is extremely low. • Nonlinear characteristics such as backlash exist.
Action pattern	• The motor is running continuously at low speed of 100 [r/min] or lower. • Acceleration/deceleration is slow (2,000 [r/min] per 1 [s] or low). • When the speed condition of 100 [r/min] or more and acceleration/deceleration condition of 2,000 [r/min] per 1 [s] are not maintained for 50 [ms]. • Acceleration/deceleration torque is smaller than unbalanced weighted/viscous friction torque.

Real-time auto tuning control parameters

Use the following parameters to set up the operation of Real-time auto tuning.

■ Relevant parameters

Class	No.	Attribute	Title	Range	Unit	Function
0	02	B	Real-time auto-gain tuning setup	0 to 6	-	You can set up the action mode of the real-time auto-gain tuning.

Setup value	Mode	Description
0	Invalid	Real-time auto-gain tuning function is disabled.
1	Standard	Stability-sensitive mode. Do not use unbalanced load, friction compensation or gain switching.
2	Positioning *1	Position-sensitive mode. Use this mode for machine using horizontal axis without offset load or ball screw driven machine with small friction.
3	Vertical axis *2	This mode adds the following features to those of positioning mode: compensates for offset load in vertical axis and minimizes positioning settling time variations.
4	Friction compensation *3	This mode adds the following features to those of vertical axis mode: shortens positioning settling time on large friction system such as belt driven axis.
5	Load characteristic measurement	This mode only estimates the load characteristics without changing the basic gain setting or friction compensation setting. Use these features in conjunction with the setup support software.
6	Customize *4	By precisely setting combination of real-time auto tuning functions through Pr 6.32 Real time auto tuning custom setup, customization to fit the application can be made.

*1 Velocity and torque controls are the same as in the standard mode.

*2 Torque control is the same as in the standard mode.

*3 Velocity control is the same as in the vertical axis mode. Torque control is the same as in the standard mode.

*4 Certain function(s) is not available in a specific control mode. Refer to description in Pr 6.32.

(To be continued)

Class	No.	Attribute	Title	Range	Unit	Function
0	03	B	Real-time auto-tuning machine stiffness setup	0 to 31	-	You can set up the response while the real-time auto-gain tuning is valid. Higher the setup value, higher the velocity response and servo stiffness will be obtained. However, when increasing the value, check the resulting operation to avoid oscillation or vibration.
6	10	B	Function expansion setup	-32768 to 32767	-	The automatic adjustment of load change inhibit function is enabled with bit14=1.
6	31	B	Real time auto tuning estimation speed	0 to 3		Set up the load characteristics estimation speed with the Real-time auto tuning being valid. A higher setup value assures faster response to a change in load characteristics but increases variations in disturbance estimation. Result of estimation is saved to EEPROM every 30 minutes. **Setup value / Mode / Description** 0 / No change / Stop estimation of load characteristics. 1 / Almost constant / Response to changes in load characteristics in every minute. 2 / Slower change / Response to changes in load characteristics in every second. 3 * / Faster change / Obtain best suitable estimation in response to changes in load characteristics. Note If the automatic oscillation detection is enabled by the support software, the setup value 3 is used.
6	32	B	Real time auto tuning custom setup	-32768 to 32767	-	When the operation mode of real time auto tuning is set to the customize (Pr 0.02 = 6), set the automatic adjusting function as shown below. Refer to Real time auto tuning custom setup

■ Real time auto tuning custom setup

Bit	Content	Description
1 to 0	Load characteristics estimation (Note 1)(Note 2)	Enable/disable the load characteristics estimation function. **Setup value / Description** 0 / Disable 1 / Enable
3 to 2	Inertia ratio update (Note 3)	Set up update to be made based on result of the load characteristics estimation of Pr 0.04 “Inertia ratio”. **Setup value / Description** 0 / Use current setup 1 / Update by the estimated value.
6 to 4	Torque compensation (Note 4)	Set up the update to be made according to the results of load characteristics estimation: Pr 6.07 "Torque command additional value" Pr 6.08 "positive direction torque compensation value" Pr 6.09 "negative direction torque compensation value". **Setup value / Description** 0 / Use current setup 1 / Disable torque compensation. Clear the parameters shown above to 0. 2 / Vertical axis mode Update Pr 6.07. Zero clear Pr 6.08 and Pr 6.09 3 / Friction compensation (low) Update Pr 6.07. Set low compensation to Pr 6.08 and Pr 6.09. 4 / Friction compensation (middle) Set middle compensation to Pr 6.08and Pr.6.09 5 / Friction compensation (high) Set high compensation to Pr 6.08 and Pr 6.09.

(To be continued)

<table>
<tr><th>Bit</th><th>Content</th><th>Description</th></tr>
<tr><td>7</td><td>Stiffness Setup
(Note 5)</td><td>Enable/disable the basic gain setup to be made according to Pr0.03 "Real-time auto-tuning machine stiffness setup".
<table>
<tr><th>Setup value</th><th>Description</th></tr>
<tr><td>0</td><td>Disable</td></tr>
<tr><td>1</td><td>Enable</td></tr>
</table></td></tr>
<tr><td>8</td><td>Fixed parameter setup
(Note 5)</td><td>Enable/disable the change of parameter that is normally set at a fixed value.
<table>
<tr><th>Setup value</th><th>Description</th></tr>
<tr><td>0</td><td>Use current setup</td></tr>
<tr><td>1</td><td>Set to a fixed value..</td></tr>
</table></td></tr>
<tr><td>10 to 9</td><td>Gain switching setup
(Note 5)</td><td>Select the gain switching relevant parameter to be used when the Real-time auto tuning is enabled.
<table>
<tr><th>Setup value</th><th>Description</th></tr>
<tr><td>0</td><td>Use current setup</td></tr>
<tr><td>1</td><td>Disable gain switching</td></tr>
<tr><td>2</td><td>Enable gain switching</td></tr>
</table></td></tr>
</table>

(Note 1) If the load characteristics estimation is disabled, the current setup cannot be changed even if the inertia ratio is updated according to the estimated value. When the torque compensation is updated by the estimated value, it is cleared to 0 (invalid).

(Note 2) If the load characteristics estimation is abled, set Pr6.31 "Real time auto tuning presumption speed" besides 0(stop estimation).

(Note 3) If the inertia ratio update is enabled, set bit 1–0 to 1(enable).
If neither is effective, the inertia ratio is not updated.

(Note 4) If the torque compensation is abled (setup value=2-5), set bit 3–2(Inertia ratio update) to 1(enable). If neither is effective, the inertia ratio is not updated. The torque compensation alone cannot be updated.

(Note 5) Set bit3–2(Inertia ratio update) to 1(enable) when this setting is set excluding 0. At this time, you can be set whether to inertia ratio update to be effective with bit 1-0(Load characteristics estimation).

◆ NOTE

- **This parameter should be setup bit by bit. Because the operation is not guaranteed when the setting is wrong, use of the setup support software is recommended for parameter editing.**
- **Do not change while the motor is operating. With this parameter is updated, when the motor stopped after the result of load characteristic measurement secured.**

<Setup procedure of bitwise parameter>

When setting parameter to a value other than 0, calculate the setup value of Pr 6.32 in the following procedure.

◆ PROCEDURE

1. **Identify the LSB of the setup.**

   Example: LSB of the torque compensation function is 4.

2. **Multiply the setup value by power of 2 (LSB).**

   Example: To set the torque compensation function to friction compensation (middle): $2^4 \times 4 = 64$.

3. **Perform steps 1. and 2. for every setup, sum up the values which are to be Pr 6.32 setup values.**

   Example: Load characteristics measurement = enable, inertia ratio update = enable, torque compensation = friction compensation (middle), stiffness setup = enable, fixed parameter = set to a fixed value, gain switching setup = enable, then,
   $2^0 \times 1+2^2 \times 1+2^4 \times 4+2^7 \times 1+2^8 \times 1+2^9 \times 2 = 1477$

Parameters changed by real-time auto-gain tuning

The Real-time auto tuning function updates the following parameters according to Pr 0.02 "Real-time auto tuning setup" and Pr 6.32 "Real time auto tuning custom setup" and by using the load characteristic estimate values.

■ Relevant parameters

Class	No.	Attribute	Title	Range	Unit	Function
0	04	B	Inertia ratio	0 to 10000	%	Updates this parameter when the Real-time auto tuning inertia ratio update is enabled.
6	07	B	Torque command additional value	-100 to 100	%	Update this parameter when the vertical axis mode for Real-time auto tuning is valid.
6	08	B	Positive direction Torque Compensation Value	-100 to 100	%	Update this parameter when the friction compensation mode for Real-time auto tuning is valid.
6	09	B	Negative direction torque compensation value	-100 to 100	%	

The Real-time auto tuning function updates the following basic gain setup parameters according to Pr0.03 "Real-time auto tuning machine stiffness setup". For details, refer to "Basic gain parameter setup tableBasic gain parameter setup tableBasic gain parameter setup table".

■ Relevant parameters

Class	No.	Attribute	Title	Range	Unit	Function
1	00	B	1st gain of position loop	0 to 30000	0.1/s	When stiffness setup is valid, updates the parameter based on the setup value.
1	01	B	1st gain of velocity loop	1 to 32767	0.1 Hz	
1	02	B	1st time constant of velocity loop integration	1 to 10000	0.1 ms	
1	04	B	1st time constant of torque filter	0 to 2500	0.01 ms	
1	05	B	2nd gain of position loop	0 to 30000	0.1/s	
1	06	B	2nd gain of velocity loop	1 to 32767	0.1 Hz	
1	07	B	2nd time constant of velocity loop integration	1 to 10000	0.1 ms	
1	09	B	2nd time constant of torque filter	0 to 2500	0.01 ms	

Real-time auto tuning function sets the following parameters to the fixed value.

■ Relevant parameters

Class	No.	Attribute	Title	Range	Unit	Function
1	03	B	1st filter of velocity detection	0 to 5	-	When fixed parameter setup is valid, set the parameter to 0.
1	08	B	2nd filter of velocity detection	0 to 5	-	
1	10	B	Velocity feed forward gain	0 to 1000	0.1 %	When fixed parameter setup is valid, set the parameter to 300 (30%).
1	11	B	Velocity feed forward filter	1 to 6400	0.01 ms	When fixed parameter setup is valid, set the parameter to 50 (0.5 ms).
1	12	B	Torque feed forward gain	0 to 1000	0.1 %	When fixed parameter setup is valid, set the parameter to 0.
1	13	B	Torque feed forward filter	1 to 6400	0.01 ms	

The Real-time auto tuning function sets the following parameters as the gain is switched.

■ **Relevant parameters**

Class	No.	Attribute	Title	Range	Unit	Function
1	14	B	2nd gain setup	0 to 1	-	Sets to 1 if the current setting is not maintained
1	15	B	Mode of position control switching	0 to 10	-	Sets to 10 to enable the gain switching. Sets to 0 to disable the gain switching.
1	16	B	Delay time of position control switching	0 to 10000	0.1 ms	Sets to 50 if the current setting is not maintained.
1	17	B	Level of position control switching	0 to 20000	-	Sets to 50 if the current setting is not maintained.
1	18	B	Hysteresis at position control switching	0 to 20000	-	Sets to 33 if the current setting is not maintained.
1	19	B	Position gain switching time	0 to 10000	0.1 ms	Sets to 33 if the current setting is not maintained.
1	20	B	Mode of velocity control switching	0 to 5	-	Sets to 0 if the current setting is not maintained.
1	21	B	Delay time of velocity control switching	0 to 10000	0.1 ms	Sets to 0 if the current setting is not maintained.
1	22	B	Level of velocity control switching	0 to 20000	-	Sets to 0 if the current setting is not maintained.
1	23	B	Hysteresis at velocity control switching	0 to 20000	-	Sets to 0 if the current setting is not maintained.
1	24	B	Mode of torque control switching	0 to 3	-	Sets to 0 if the current setting is not maintained.
1	25	B	Delay time of torque control switching	0 to 10000	0.1 ms	Sets to 0 if the current setting is not maintained.
1	26	B	Level of torque control switching	0 to 20000	-	Sets to 0 if the current setting is not maintained.
1	27	B	Hysteresis at torque control switching	0 to 20000	-	Sets to 0 if the current setting is not maintained.

The following settings are always set to invalid when Pr 0.02 "Real-time auto tuning setup" is not 0. However, the parameter settings are not changed.

■ **Relevant parameters**

Class	No.	Attribute	Title	Range	Unit	Function
6	10	B	Function expansion setup	0 to 1023	-	Instantaneous velocity observer function enable bit (bit 0), disturbance observer function enable bit (bit 1) are internally disabled.
6	23	B	Load change compensation gain	-100 to 100	%	Parameter setup can be changed, but disturbance observer is disabled.
6	24	B	Load change compensation filter	10 to 2500	0.01 ms	Parameter setup can be changed, but disturbance observer is disabled.
6	73	B	Load estimation filter	0 to 2500	0.01 ms	When set to Pr 6.10 bit14=1 in case of stiffness setting is enabled, sets to 0.13 ms. When set to Pr 6.10 bit14=0, set to 0 ms.
6	74	B	Torque compensation frequency 1	0 to 5000	0.1 Hz	Regardless value of the Pr 6.10 bit 14, sets to 0.
6	75	B	Torque compensation frequency 2	0 to 5000	0.1 Hz	Regardless value of the Pr 6.10 bit 14, sets to 0.
6	76	B	Load estimation count	0 to 8	-	When set to Pr 6.10 bit 14=1 in case of stiffness setting is enabled, sets to 4.

How to use

When Pr 0.02 (Setup of real-time auto-gain tuning mode) is set to a value other than 0, control parameter is automatically set according to Pr0.03 "Real-time auto tuning machine stiffness setup".

When the servo is ON, enter operation command after about 100ms. When the load characteristic is correctly estimated, Pr 0.04 Inertia ratio is updated. With certain mode settings, Pr 6.07 Torque command addition value, Pr 6.08 Positive direction compensation value and Pr 6.09 Negative direction compensation value will be changed.

When value of Pr0.03 "Real-time auto tuning machine stiffness setup" is increased, the motor responsiveness will be improved. Determine the most appropriate stiffness in relation to the positioning setup time and vibration condition.

Other cautions

- Immediately after the first servo-on upon start up; or after increasing Pr0.03 "Real-time auto tuning machine stiffness setup", abnormal sound or oscillation may be generated until the load characteristics is stabilized. If such abnormality lasts or repeats for 3 or more reciprocating operations, take the following countermeasures.

(1) Lower the setting value of Pr0.03 "Real-time auto tuning machine stiffness setup".

(2) Set Pr 0.02 Real-time auto tuning setup to 0 to disable the Real-time auto tuning.

(3) Set Pr 0.04 Inertial ratio to the calculational value of the equipment and set Pr 6.07 Torque command addition value, Pr 6.08 Positive direction compensation value and Pr 6.09 Negative direction compensation value to 0.

- When abnormal noise and oscillation occur, Pr 0.04 (Inertia ratio) or Pr 6.07 (Torque command additional value), Pr 6.08 (Positive direction torque compensation value), Pr 6.09 (Negative direction torque compensation value) might have changed to extreme values. Take the same measures as described in the setp (3) above in these cases.
- Among the results of real-time auto-gain tuning, Pr 0.04 (Inertia ratio) and Pr 6.07 (Torque command additional value), Pr 6.08 (Positive direction torque compensation value), Pr 6.09 (Negative direction torque compensation value) will be written to EEPROM every 30 minutes. When you turn on the power again, the auto-gain tuning will be executed using the latest data as initial values. If power is turned off within 30 minutes after the end of tuning process, the result of the Real-time auto tuning is not saved. If the result is not saved, manually write parameters to EEPROM and then turn off power.
- The control gain is updated when the motor is stopped. Therefore, if motor is not stopped because gain is excessively low or commands are given continually in one direction, the change in Pr0.03 "Real-time auto tuning machine stiffness setup" may not be reflected. In this case, abnormal sound or oscillation may be generated depending on the stiffness setting that is reflected after the motor stops.
  After the stiffness setting is changed, be sure to stop the motor and check that the stiffness setting is reflected before performing next operation.

Basic gain parameter setup table

Stiffness	1st gain				2nd gain				For load fluctuation suppression function
	Pr 1.00	Pr 1.01	Pr 1.02	Pr 1.04	Pr 1.05	Pr 1.06	Pr 1.07 (Note 1)	Pr 1.09	Pr 6.24
	Position [0.1/s]	Velocity [0.1 Hz]	Velocity loop integration [0.1 ms]	Torque [0.01 ms]	Position [0.1/s]	Velocity [0.1 Hz]	Velocity loop integration [0.1 ms]	Torque [0.01 ms]	Load fluctuation compensation filter [0.01/ms]
0	20	15	3700	1500	25	15	10000	1500	2500
1	25	20	2800	1100	30	20	10000	1100	2500
2	30	25	2200	900	40	25	10000	900	2500
3	40	30	1900	800	45	30	10000	800	2500
4	45	35	1600	600	55	35	10000	600	2500
5	55	45	1200	500	70	45	10000	500	2500
6	75	60	900	400	95	60	10000	400	2500
7	95	75	700	300	120	75	10000	300	2120
8	115	90	600	300	140	90	10000	300	1770
9	140	110	500	200	175	110	10000	200	1450
10	175	140	400	200	220	140	10000	200	1140
11	320	180	310	126	380	180	10000	126	880
12	390	220	250	103	460	220	10000	103	720
13	480	270	210	84	570	270	10000	84	590
14	630	350	160	65	730	350	10000	65	450
15	720	400	140	57	840	400	10000	57	400
16	900	500	120	45	1050	500	10000	45	320
17	1080	600	110	38	1260	600	10000	38	270
18	1350	750	90	30	1570	750	10000	30	210
19	1620	900	80	25	1880	900	10000	25	180
20	2060	1150	70	20	2410	1150	10000	20	140
21	2510	1400	60	16	2930	1400	10000	16	110
22	3050	1700	50	13	3560	1700	10000	13	90
23	3770	2100	40	11	4400	2100	10000	11	80
24	4490	2500	40	9	5240	2500	10000	9	60
25	5000	2800	35	8	5900	2800	10000	8	60
26	5600	3100	30	7	6500	3100	10000	7	50
27	6100	3400	30	7	7100	3400	10000	7	50
28	6600	3700	25	6	7700	3700	10000	6	40
29	7200	4000	25	6	8400	4000	10000	6	40
30	8100	4500	20	5	9400	4500	10000	5	40
31	9000	5000	20	5	10500	5000	10000	5	40

(Note 1) In the vertical axis mode or friction compensation mode (Pr0.02=3,4), Pr1.07 is kept at 9999 until load characteristic estimation is completed.

5.1.2 Adaptive filter

This function estimates the resonance frequency from the vibrating component which appears on the motor velocity, and removes the resonance component from the torque command with adaptive filter, thus reduces the resonance vibration.

Applicable range

This function works under the following condition.

Conditions under which the Adaptive filter is activated:

Control Mode	• Applies to other control modes than torque control.
Others	• Should be in servo-on condition • Elements other than control parameters, such as deviation counter clear command inhibit and torque limit are appropriately set, enabling the motor to run normally.

Caution

In the following condition, normal operation may not be expected–manually set the notch filter to prevent resonance.

Conditions which obstruct adaptive filter action:

Resonance point	• Resonance frequency is lower than the velocity response frequency x 3 (Hz). • Resonance peak is low, or control gain is low where the motor velocity is not affected by this. • Three or more resonance points exist.
Load	• Motor velocity variation with high harmonic component is generated due to non-linear factors such as backlash.
Command	• Acceleration/deceleration is rapid such as 30000 [r/min] per 1 [s].

Relevant parameters

Set the operation of the adaptive filter to the following parameter.

■ **Relevant parameters**

Class	No.	Attribute	Title	Range	Unit	Function
2	00	B	Adaptive filter mode setup	0 to 6	-	Select the operation mode of adaptive filter:

Setup value	Mode	Description
0	Adaptive filter: invalid	The adaptive filter is disabled. Parameters related to the 3rd and 4th notch filter hold the current value.
1	Adaptive filter: 1 filter is valid	One adaptive filter is enabled. Parameters related to the 3rd notch filter will be updated based on adaptive performance.
2	Adaptive filter: 2 filters are valid	Two adaptive filters are enabled. Parameters related to the 3rd and 4th notch filters will be updated based on adaptive performance.
3	Resonance frequency measurement mode	Measure the resonance frequency. Result of measurement can be checked with the setup support software PANATERM for Multi. Parameters related to the 3rd and 4th notch filter hold the current value.
4	Clear result of adaptation	Parameters related to the 3rd and 4th notch filter are disabled and results of adaptive operation are cleared.
5	High accurate adaptive filter	Two adaptive filters are enabled. Parameters related to the third and fourth notch filter are updated depending on adaptive results.We recommend this setting when using two adaptive filters.
6	Maker uses	It is the fit gain function of setup support software PANATERM for Multi, and internally used.Do not use this setting in normal conditions.

The adaptive filter automatically sets up the following parameters.

■ **Relevant parameters**

Class	No.	Attribute	Title	Range	Unit	Function
2	07	B	3rd notch frequency	50 to 5000	Hz	Notch frequency is automatically set to the 1st resonance frequency estimated by the adaptive filter. In no resonance point is found, the frequency is set to 5000.
2	08	B	3rd notch width selection	0 to 20	-	Automatically set when the adaptive filter is active.
2	09	B	3rd notch depth selection	0 to 99	-	Automatically set when the adaptive filter is active.
2	10	B	4th notch frequency	50 to 5000	Hz	Notch frequency is automatically set to the 2nd resonance frequency estimated by the adaptive filter. In no resonance point is found, the frequency is set to 5000.
2	11	B	4rd notch width selection	0 to 20	-	Automatically set when 2 adaptive filters are active.
2	12	B	4rd notch depth selection	0 to 99	-	Automatically set when 2 adaptive filters are active.

How to use

Enter the action command with Pr2.00 (Adaptive filter mode setup) set to a value other than 0.

If the resonance point affects the motor velocity, parameters of 3rd notch filter and/or 4th notch filters are automatically set according to the number of adaptive filters.

Other cautions

- Immediately after the first servo-on at start up; or after increasing stiffness setting with the Real-time auto tuning enabled, abnormal sound or oscillation may be generated until the adaptive filter stabilizes. If such abnormality lasts or repeats for 3 or more reciprocating operations, take the following countermeasures.
  - Write the parameters which have given the normal operation into EEPROM.
  - Lower the setting value of Pr0.03 (Real-time auto tuning machine stiffness setup).
  - Invalidate the adaptive filter by setting Pr2.00 (Adaptive filter mode setup) to 0.
  - Set up the notch filter manually.
- Abnormal sound or oscillation may excessively change the setup value of 3rd and 4th notch filters. If such change occurs, disable the adaptive filter as described in step 3) above, change setup value of Pr 2.07 3rd notch frequency and Pr 2.10 "4th notch frequency" to 5000 (disable), and then enable the adaptive filter again.
- The 3rd filters (Pr 2.07) and 4th notch filters (Pr 2.10) are written to EEPROM every 30minutes. Upon power up, these data are used as default values during adaptive process.

5.1.3 Real-time auto tuning (Two-degree-of-freedom control mode standard type)

The 2 degrees of freedom control mode has two types: standard type and synchronization type.

Standard type	This is a standard mode. Use this mode normally.
Synchronization type	Use this mode for locus control of multiple axes of an articulated robot, etc.

This item is an auto tuning function exclusive for the standard type.
Load characteristic of a machine is estimated on a real-time basis, and using the results, basic gain settings and friction compensation are automatically specified in accordance of hardness parameters.

Applicable range

This function is enabled under the following conditions:

Conditions for Real-time auto tuning:

Control Mode	• Position control, Velocity control, Torque control, Full-closed control Pr6.47 bit0=1 and bit3=0:2 Degrees of Freedom Control Mode Standard type
Others	• In Servo On status. • Parameters for other functions than control such as torque limit settings must be specified appropriately and normal rotation of motor must have no problems.

Cautions

- After the power is turned on, estimate value following may become quicker regardless of Pr6.31 "Real time auto tuning estimation speed" until operation data effective for the estimation of load characteristics is sufficiently accumulated.
- When real-time auto-gain tuning is effective, an estimate value may become abnormal due to disturbance. If you want to obtain stable operation from when the power is turned on, it is recommended to disable the real-time auto-gain tuning.

Real-time auto tuning may not normally function in the following conditions. If that happens, change the load conditions/operation pattern or see the descriptions about manual tuning to manually configure relevant parameters.

Conditions hindering Real-time auto tuning:

Load condition	• The load mass is too small or large with reference to the rotor mass (smaller than three times or 20 times or larger). • The load mass varies. • The mechanical stiffness is extremely low. • Any non-linear characteristic exists such as backlash.
Operation pattern	• Continuous use at a low speed of less than 100 [mm/s] • The acceleration is low at 2000 [mm/s] per 1 [s]. • A speed at 100 [mm/s] or higher or an acceleration/deceleration of 2000 [mm/s] per 1 [s] does not continue for 50 [ms] or longer. • The acceleration/deceleration torque is small with reference to the uneven load/ viscous friction torque.

Parameters controlling operation of real-time auto tuning

Configure the Real-time auto tuning operation by setting the following parameters.

■ Relevant parameters

<table>
<tr><th>Class</th><th>No.</th><th>Attribute</th><th>Title</th><th>Range</th><th>Unit</th><th>Function</th></tr>
<tr><td>0</td><td>02</td><td>B</td><td>Real-time auto-gain tuning setup</td><td>0 to 6</td><td>-</td><td>Specifies the operation mode of Real-time auto tuning.
<table>
<tr><th>Setup value</th><th>Mode</th><th>Description</th></tr>
<tr><td>0, 6</td><td>Invalid</td><td>The Real-time auto tuning function is disabled.</td></tr>
<tr><td>1</td><td>Standard response mode</td><td>The mode for the optimum stability. No uneven load or friction compensation takes place and no gain switching is used.</td></tr>
<tr><td>2</td><td>High response mode 1</td><td>The mode for the optimum positioning. Used for a ball screw-driven device, etc. with no uneven load and little friction, as in a horizontal axis.</td></tr>
<tr><td>3</td><td>High response mode 2</td><td>In addition to the high responce mode 1, compensation against biased load and application of 3rd gain are made to reduce variations in settling time of positioning.</td></tr>
<tr><td>4</td><td>High response mode 3 *</td><td>In addition to the high responce mode 2, settling time of positioning is reduced for a load where frictions are high.</td></tr>
<tr><td>5</td><td>Load characteristic measurement</td><td>Basic gain settings and friction compensation settings are not changed and load characteristic estimation only is made. This is used in combination with setup support software.</td></tr>
<tr><td>6</td><td>Fit-gain mode</td><td>Use this mode to fine-adjust the stiffness setting after fit-gain has been completed.</td></tr>
</table>
* In velocity control, it is the same as high response mode 2. In addition, Parameters of Pr6.08 "Positive direction torque compensation value", Pr6.09 "Negative direction torque compensation value" and Pr6.50 "Viscous friction compensation gain" are updated, but not reflected in the operation.</td></tr>
<tr><td>0</td><td>03</td><td>B</td><td>Real-time auto-tuning machine stiffness setup</td><td>0 to 31</td><td>-</td><td>Specifies the response for enabled Real-time auto tuning. A larger setting increases the speed response and servo stiffness but invites more vibration. Gradually increase the setting while monitoring the operation.</td></tr>
<tr><td>6</td><td>10</td><td>B</td><td>Function expansion setup</td><td>-32768 to 32767</td><td>-</td><td>The automatic adjustment of load change inhibit function is enabled with bit14=1.</td></tr>
<tr><td>6</td><td>31</td><td>B</td><td>Real time auto tuning estimation speed</td><td>0 to 3</td><td>-</td><td>Specifies the load characteristics estimation speed for enabled Real-time auto tuning. A larger setting allows faster follow-up to the variation in the load characteristics but also increases estimation fluctuation due to disturbance. The result of estimation is stored in the EEPROM every 30 minutes.
<table>
<tr><th>Setup value</th><th>Mode</th><th>Description</th></tr>
<tr><td>0</td><td>No change</td><td>Terminates estimation of load characteristic.</td></tr>
<tr><td>1</td><td>Little change</td><td>Responded against change of load characteristic on the order of minutes.</td></tr>
<tr><td>2</td><td>Gradual change</td><td>Responded against change of load characteristic on the order of seconds.</td></tr>
<tr><td>3 *</td><td>Steep change</td><td>Appropriate estimation is made against change of load characteristic.</td></tr>
</table>
* If oscillation automatic detection is made valid from setup support software, this setting is ignored and operation is based on settings of setting value 3.</td></tr>
<tr><td>6</td><td>32</td><td>B</td><td>Real time auto tuning custom setup</td><td>-32768 to 32767</td><td>-</td><td>Not available in 2 degrees of freedom control mode.
Always set to 0.</td></tr>
</table>

Parameter changed by real-time auto tuning

The Real-time auto tuning function updates the following parameters using load characteristic values, in accordance with Pr0.02 "Real-time auto-gain tuning setup."

■ Relevant parameters

Class	No.	Attribute	Title	Range	Unit	Function
0	04	B	Inertia ratio	0 to 10000	%	Updates this parameter when the Real-time auto tuning inertia ratio update is enabled (Pr0.02=1 to 4).
6	07	B	Torque command additional value	-100 to 100	%	Updates this parameter when high response mode 2 or 3 (Pr0.02=3,4) for Real-time auto tuning is selected.
6	08	B	Positive direction torque compensation value	-100 to 100	%	Updates this parameter when high response mode 3 (Pr0.02=4) for Real-time auto tuning is selected.
6	09	B	Negative direction torque compensation value	-100 to 100	%	Updates this parameter when high response mode 3 (Pr0.02=3) for Real-time auto tuning is selected.
6	50	B	Viscous friction compensating gain	0 to 10000	0.1%/ (10000r/ min)	Updates this parameter when high response mode 3 (Pr0.02=3) for Real-time auto tuning is selected.

The Real-time auto tuning function updates the following basic gain setup parameters according to Pr0.03 "Real-time auto tuning machine stiffness setup".
For details, refer to "Basic gain parameter setup table".

■ Relevant parameters

Class	No.	Attribute	Title	Range	Unit	Function
1	00	B	1st gain of position loop	0 to 30000	0.1/s	When stiffness setup is valid, updates the parameter based on the setup value.
1	01	B	1st gain of velocity loop	1 to 32767	0.1 Hz	
1	02	B	1st time constant of velocity loop integration	1 to 10000	0.1 ms	
1	04	B	1st time constant of torque filter	0 to 2500	0.01 ms	
1	05	B	2nd gain of position loop	0 to 30000	0.1/s	
1	06	B	2nd gain of velocity loop	1 to 32767	0.1 Hz	
1	07	B	2nd time constant of velocity loop integration	1 to 10000	0.1 ms	
1	09	B	2nd time constant of torque filter	0 to 2500	0.01 ms	
1	22	B	Command smoothing filter	0 to 10000	0.1 ms	When stiffness setup is valid (Pr0.02=1 to 4), updates the parameter based on the setup value. Sets the time constant for the command filter during 2 degrees of freedom control.
6	48	B	Adjust filter	0 to 2000	0.1 ms	When stiffness setup is valid (Pr0.02=1 to 4), updates the parameter based on the setup value.

Real-time auto-tuning function sets the following parameters to the fixed value.

■ **Relevant parameters**

Class	No.	Attribute	Title	Range	Unit	Function
1	03	B	1st filter of velocity detection	0 to 5	-	When fixed parameter setup is valid (Pr0.02=1 to 4), set the parameter to 0.
1	08	B	2nd filter of velocity detection	0 to 5	-	
1	10	B	Velocity feed forward gain	0 to 4000	0.1 %	When fixed parameter setup is valid (Pr0.02=1 to 4), set the parameter to 1000 (100%).
1	11	B	Velocity feed forward filter	1 to 6400	0.01 ms	When fixed parameter setup is valid (Pr0.02=1 to 4), set the parameter to 0 (invalid).
1	12	B	Torque feed forward gain	0 to 2000	0.1 %	When fixed parameter setup is valid (Pr0.02=1 to 4), set the parameter to 1000 (100%).
1	13	B	Torque feed forward filter	1 to 6400	0.01 ms	When fixed parameter setup is valid (Pr0.02=1 to 4), set the parameter to 0 (invalid).
6	10	B	Function expansion setup	-32768 to 32767	-	When fixed parameter setup is valid (Pr0.02=1 to 4), set the parameter to bit4=1.
6	49	B	Adjust/Torque command attenuation term	0 to 99	-	When fixed parameter setup is valid (Pr0.02=1 to 4), set the parameter to 15. When Pr0.02=6, set the tenths digit to 1 and maintain the unit digit.

The Real-time auto tuning function sets the following parameters as the gain is switched.

■ **Relevant parameters**

Class	No.	Attribute	Title	Range	Unit	Function
1	14	B	2nd gain setup	0 to 1	-	Sets to 1 if the current setting is not maintained (Pr0.02=1 to 4).
1	15	B	Mode of position control switching	0 to 10	-	For the standard response mode (Pr0.02=1), set the parameter to 0. For high response mode 1 to 3 (Pr0.02=2 to 4), set the parameter to 7.
1	16	B	Delay time of position control switching	0 to 10000	0.1 ms	Sets to 10 if the current setting is not maintained (Pr0.02=1 to 4).
1	17	B	Level of position control switching	0 to 20000	-	Sets to 0 if the current setting is not maintained (Pr0.02=1 to 4).
1	18	B	Hysteresis at position control switching	0 to 20000	-	Sets to 0 if the current setting is not maintained (Pr0.02=1 to 4).
1	19	B	Position gain switching time	0 to 10000	0.1 ms	Sets to 10 if the current setting is not maintained (Pr0.02=1 to 4).
1	20	B	Mode of velocity control switching	0 to 5	-	Sets to 0 if the current setting is not maintained (Pr0.02=1 to 4).
1	21	B	Delay time of velocity control switching	0 to 10000	0.1 ms	Sets to 0 if the current setting is not maintained (Pr0.02=1 to 4).
1	22	B	Level of velocity control switching	0 to 20000	-	Sets to 0 if the current setting is not maintained (Pr0.02=1 to 4).
1	23	B	Hysteresis at velocity control switching	0 to 20000	-	Sets to 0 if the current setting is not maintained (Pr0.02=1 to 4).
1	24	B	Mode of torque control switching	0 to 3	-	Sets to 0 if the current setting is not maintained (Pr0.02=1 to 4).
1	25	B	Delay time of torque control switching	0 to 10000	0.1 ms	Sets to 0 if the current setting is not maintained (Pr0.02=1 to 4).
1	26	B	Level of torque control switching	0 to 20000	-	Sets to 0 if the current setting is not maintained (Pr0.02=1 to 4).
1	27	B	Hysteresis at torque control switching	0 to 20000	-	Sets to 0 if the current setting is not maintained (Pr0.02=1 to 4).

(To be continued)

Class	No.	Attribute	Title	Range	Unit	Function
6	05	B	Position 3rd gain valid time	0 to 10000	0.1 ms	For the standard response mode or high response mode 1 (Pr0.02=1, 2), set the parameter to 0 (invalid). For high response mode 2 or 3 (Pr0.02=3,4), set the parameter to "Pr2.22 x 20". (However, the maximum value is limited to 10000.)
6	06	B	Position 3rd gain scale factor	50 to 1000	%	For the standard response mode or high response mode 1 (Pr0.02=1,2), set the parameter to 100 (100%). For high response mode 2 or 3 ((Pr0.02=3,4), set the parameter to 200 (200%).

When Pr0.02 "Real-time auto-gain tuning setup" = 1 to 4 or 6, the following settings and parameters are set automatic for enable/disable state of Pr 6.10 "Function expansion setup" load variation suppression function automatic adjustment.

■ Relevant parameters

Class	No.	Attribute	Title	Range	Unit	Function
6	10	B	Function expansion setup	-32768 to 32767	-	When set to Pr 6.10 bit14=1, load variation suppression function will become enabled (bit1 = 1). When set to Pr 6.10 bit14=0,it is disabled(bit1 = 0).
6	23	B	Disturbance torque compensating gain	-100 to 100	%	When set to Pr 6.10 bit14=1, sets to 90 %. When set to Pr 6.10 bit14=0, sets to 0 %.
6	24	B	Disturbance observer filter	10 to 2500	0.01 ms	When set to Pr 6.10 bit14=1, updates to match rigidity. When set to Pr 6.10 bit14=0, value is held.
6	73	B	Load estimation filter	0 to 2500	0.01 ms	When set to Pr 6.10 bit14=1, sets to 0.13 ms. When set to Pr 6.10 bit14=0, sets to 0 ms.
6	74	B	Torque compensation frequency 1	0 to 5000	0.1 Hz	Regardless value of the Pr 6.10 bit 14, sets to 0.
6	75	B	Torque compensation frequency 2	0 to 5000	0.1 Hz	Regardless value of the Pr 6.10 bit 14, sets to 0.
6	76	B	Load estimation count	0 to 8	-	When set to Pr 6.10 bit14=1, sets to 4. When set to Pr 6.10 bit14=0, sets to 0.

How to use

When Pr 0.02 (Setup of real-time auto-gain tuning mode) is set to a value other than 0, control parameter is automatically set according to Pr0.03 "Real-time auto tuning machine stiffness setup".

When the servo is ON, enter operation command after about 100ms. When the load characteristic is correctly estimated, Pr 0.04 "Inertia ratio" is updated. With certain mode settings, Pr 6.07 "Torque command addition value", Pr 6.08 "Positive direction compensation value", Pr6.09 "Negative direction torque compensation value", and Pr6.50 "Viscous friction compensating gain." will be changed.

When value of Pr0.03 "Real-time auto tuning machine stiffness setup" is increased, the motor responsiveness will be improved. Determine the most appropriate stiffness in relation to the positioning setup time and vibration condition.

Other cautions

- Strange noises or vibrations may occur on the first action of turning immediately after startup or setting higher value of Pr0.03 "Real-time auto tuning machine stiffness setup" until estimation of load characteristic becomes stable. This is not a fault if the function becomes stable soon. If oscillation or continued generation of abnormal noise through three or more reciprocating movements often occurs, take the following steps.

(1) Specify lower value for Pr0.03 "Real-time auto tuning machine stiffness setup"

(2) Specify "0" for Pr0.02 "Real-time auto-gain tuning setup" and make Real-time auto tuning invalid.

(3) Specify a theoretical value of device for Pr0.04 "Inertia ratio" and specify "0" for Pr6.07 "Torque command additional value", Pr6.08 "Positive direction torque compensation value", Pr6.09 "Negative direction torque compensation value" and Pr6.50 "Viscous friction compensating gain"

- After occurrence of strange noises or vibrations, values of Pr0.04 " Inertia ratio", Pr6.07 "Torque command additional value", Pr6.08 "Positive direction torque compensation value", Pr6.09 "Negative direction torque compensation value", or Pr6.50 "Viscous friction compensating gain" may have been changed into extreme values. If this is the case, take Step (3) above.
- The results of real-time automatic gain tuning, such as Pr0.04 "Inertia ratio," Pr6.07 "Torque command additional value", Pr6.08 "Positive direction torque compensation value", Pr6.09 "Negative direction torque compensation value", and Pr6.50 "Viscous friction compensating gain" are written in EEPROM in every 30 minutes. Upon restarting of power, auto tuning is performed using the data for initial values. The results of real-time auto-gain tuning are not stored if the power is turned off before 30 minutes have elapsed. In this case, manually write the parameters to the EEPROM before turning off the power.
- The control gain is updated when the motor is stopped. Therefore, if motor is not stopped because gain is excessively low or commands are given continually in one direction, the change in Pr0.03 "Real-time auto tuning machine stiffness setup" may not be reflected. In this case, abnormal sound or oscillation may be generated depending on the stiffness setting that is reflected after the motor stops.

  After the stiffness setting is changed, be sure to stop the motor and check that the stiffness setting is reflected before performing next operation.
- When Real-time auto tuning is enabled under two-degree-of-freedom control mode, torque feed forward is disabled (equivalent to Pr1.12=0) regardless of the setting value in Pr1.12 "Torque feed forward gain." The state in which it operates with torque feed forward disabled will continue until the next operation is executed.
  - Set Pr1.12 to a value other than the current parameter (1000) after switching Real-time auto tuning from enabled to disabled.

Basic gain parameter setup table

Stiffness	1st gain / 2nd gain				Command response		Tuning filter	For load fluctuation suppression function
	Pr 1.00 Pr 1.05	Pr 1.01 Pr 1.06	Pr 1.02 Pr 1.07	Pr 1.04 Pr 1.09	Pr 2.22		Pr 6.48 (Note 1)	Pr 6.24
	Position [0.1/s]	Speed [0.1 Hz]	Velocity integral [0.1 ms]	Torque [0.01 ms]	Time constant [0.1 ms]		Time constant [0.1 ms]	Load fluctuation compensation filter [0.01/ms]
					Standard response mode	High response mode 1 to 3		
0	20	15	3700	1500	1919	764	155	2500
1	25	20	2800	1100	1487	595	115	2500
2	30	25	2200	900	1214	486	94	2500
3	40	30	1900	800	960	384	84	2500
4	45	35	1600	600	838	335	64	2500
5	55	45	1200	500	668	267	54	2500
6	75	60	900	400	496	198	44	2500
7	95	75	700	300	394	158	34	2120
8	115	90	600	300	327	131	34	1770
9	140	110	500	200	268	107	24	1450
10	175	140	400	200	212	85	23	1140
11	320	180	310	126	139	55	16	880
12	390	220	250	103	113	45	13	720
13	480	270	210	84	92	37	11	590
14	630	350	160	65	71	28	9	450
15	720	400	140	57	62	25	8	400
16	900	500	120	45	50	20	7	320
17	1080	600	110	38	41	17	6	270
18	1350	750	90	30	33	13	5	210
19	1620	900	80	25	28	11	5	180
20	2060	1150	70	20	22	9	4	140
21	2510	1400	60	16	18	7	4	110
22	3050	1700	50	13	15	6	3	90
23	3770	2100	40	11	12	5	3	80
24	4490	2500	40	9	10	4	3	60
25	5000	2800	35	8	9	4	2	60
26	5600	3100	30	7	8	3	2	50
27	6100	3400	30	7	7	3	2	50
28	6600	3700	25	6	7	3	2	40
29	7200	4000	25	6	6	2	2	40
30	8100	4500	20	5	6	2	2	40
31	9000	5000	20	5	5	2	2	40

(Note 1) There is that Pr6.48 “Adjust filter” adds 1 to by a combination of driver and motor.

5.1.4 Real-time auto tuning (Two-degree-of-freedom control mode synchronization type)

The 2 degrees of freedom control mode has two types: standard type and synchronization type.

Standard type	This is a standard mode. Use this mode normally.
Synchronization type	Use this mode for locus control of multiple axes of an articulated robot, etc.

This item is an auto tuning function exclusive for the synchronization type.
Load characteristic of a machine is estimated on a real-time basis, and using the results, basic gain settings and friction compensation are automatically specified in accordance of hardness parameters.

Applicable range

This function is enabled under the following conditions:

Conditions for Real-time auto tuning:

Control Mode	• Position Control (Semi-closed Control) Pr6.47 bit0=1 and bit3=1:2 Degrees of Freedom Control Mode Synchronization type
Others	• In Servo On status. • Parameters for other functions than control such as torque limit settings must be specified appropriately and normal rotation of motor must have no problems.

Cautions

- After the power is turned on, estimate value following may become quicker regardless of Pr6.31 "Real time auto tuning estimation speed" until operation data effective for the estimation of load characteristics is sufficiently accumulated.
- When real-time auto-gain tuning is effective, an estimate value may become abnormal due to disturbance. If you want to obtain stable operation from when the power is turned on, it is recommended to disable the real-time auto-gain tuning.

Real-time auto tuning may not normally function in the following conditions. If that happens, change the load conditions/operation pattern or see the descriptions about manual tuning to manually configure relevant parameters.

Conditions hindering Real-time auto tuning:

Load condition	• The load mass is too small or large with reference to the rotor mass (smaller than three times or 20 times or larger). • The load mass varies. • The mechanical stiffness is extremely low. • Any non-linear characteristic exists such as backlash.
Operation pattern	• Continuous use at a low speed of less than 100 [mm/s] • The acceleration is low at 2000 [mm/s] per 1 [s]. • A speed at 100 [mm/s] or higher or an acceleration/deceleration of 2000 [mm/s] per 1 [s] does not continue for 50 [ms] or longer. • The acceleration/deceleration torque is small with reference to the uneven load/ viscous friction torque.

Parameters controlling operation of Real-time auto tuning

Configure the Real-time auto tuning operation by setting the following parameters.

■ Relevant parameters

<table>
<tr><th>Class</th><th>No.</th><th>Attribute</th><th>Title</th><th>Range</th><th>Unit</th><th>Function</th></tr>
<tr><td>0</td><td>02</td><td>B</td><td>Real-time auto-gain tuning setup</td><td>0 to 6</td><td>-</td><td>Specifies the operation mode of Real-time auto tuning.
<table>
<tr><th>Setup value</th><th>Mode</th><th>Description</th></tr>
<tr><td>0, 6</td><td>Invalid</td><td>The Real-time auto tuning function is disabled.</td></tr>
<tr><td>1</td><td>Synchronization</td><td>Mode for synchronization control.
Offset load compensation and friction compensation are not performed. The command filter will be maintained. Use this mode first. If there is any problem, use the other mode.</td></tr>
<tr><td>2</td><td>Synchronous friction compensation</td><td>In addition to the synchronization mode, dynamic friction/viscous friction compensation is applied. Use this mode for a load with large friction.</td></tr>
<tr><td>3</td><td>Stiffness setup</td><td>Inertia ratio estimation, offset load compensation, and friction compensation are not performed, and only the gain filter setup corresponding to the stiffness table is updated.
For a load with large inertia variations, estimate the inertia in the synchronization mode, etc., and then use this mode.</td></tr>
<tr><td>4</td><td>Load characteristic update</td><td>In the gain filter setup, only the inertia ratio and dynamic friction/viscous friction compensation are applied among load characteristics.</td></tr>
<tr><td>5</td><td>Load characteristic measurement</td><td>Basic gain settings and friction compensation settings are not changed and load characteristic estimation only is made. This is used in combination with setup support software.</td></tr>
<tr><td>6</td><td>Load change support mode</td><td>Use this mode to make robust adjustments in load change.</td></tr>
</table></td></tr>
<tr><td>0</td><td>03</td><td>B</td><td>Real-time auto-tuning machine stiffness setup</td><td>0 to 31</td><td>-</td><td>Specifies the response for enabled Real-time auto tuning.
A larger setting increases the speed response and servo stiffness but invites more vibration.
Gradually increase the setting while monitoring the operation.</td></tr>
<tr><td>6</td><td>10</td><td>B</td><td>Function expansion setup</td><td>-32768 to 32767</td><td>-</td><td>The automatic adjustment of load change inhibit function is enabled with bit14=1.</td></tr>
<tr><td>6</td><td>31</td><td>B</td><td>Real-time auto tuning estimation speed</td><td>0 to 3</td><td>-</td><td>Specifies the load characteristics estimation speed for enabled Real-time auto tuning. A larger setting allows faster follow-up to the variation in the load characteristics but also increases estimation fluctuation due to disturbance. The result of estimation is stored in the EEPROM every 30 minutes.
<table>
<tr><th>Setup value</th><th>Mode</th><th>Description</th></tr>
<tr><td>0</td><td>No change</td><td>Terminates estimation of load characteristic.</td></tr>
<tr><td>1</td><td>Little change</td><td>Responded against change of load characteristic on the order of minutes.</td></tr>
<tr><td>2</td><td>Gradual change</td><td>Responded against change of load characteristic on the order of seconds.</td></tr>
<tr><td>3 *</td><td>Steep change</td><td>Appropriate estimation is made against change of load characteristic.</td></tr>
</table>
* If oscillation automatic detection is made valid from setup support software(PANATERM for Multi), this setting is ignored and operation is based on settings of setting value 3.</td></tr>
<tr><td>6</td><td>32</td><td>B</td><td>Real-time auto tuning custom setup</td><td>-32768 to 32767</td><td>-</td><td>Not available in 2 degrees of freedom control mode.
Always set to 0.</td></tr>
</table>

Parameter changed by Real-time auto tuning

The Real-time auto tuning function updates the following parameters according to Pr0.02 "Real-time auto-tuning setup" by using the load characteristic estimate value.

■ Relevant parameters

Class	No.	Attribute	Title	Range	Unit	Function
0	04	B	Inertia ratio	0 to 10000	%	Updates this parameter in the case of the synchronization mode (Pr0.02=1), synchronous friction compensation mode (Pr0.02=2) and load characteristic update mode (Pr0.02=4) for Real-time auto tuning.
6	08	B	Positive direction torque Compensation Value	-100 to 100	%	Updates this parameter in the case of the synchronous friction compensation mode (Pr0.02=2) and load characteristic update mode (Pr0.02=4) for Real-time auto tuning.
6	09	B	Negative direction torque compensation value	-100 to 100	%	Updates this parameter in the case of the synchronous friction compensation mode (Pr0.02=2) and load characteristic update mode (Pr0.02=4) for Real-time auto tuning.
6	50	B	Viscous friction compensating gain	0 to 10000	0.1%/ (10000r/min)	Updates this parameter in the case of the synchronous friction compensation mode (Pr0.02=2) and load characteristic update mode (Pr0.02=4) for Real-time auto tuning.

The Real-time auto tuning function updates the following basic gain setup parameters according to Pr0.03 "Real-time auto-tuning machine stiffness setup". For details, refer to "Basic gain parameter setup table".

■ Relevant parameters

Class	No.	Attribute	Title	Range	Unit	Function
1	00	B	1st gain of position loop	0 to 30000	0.1/s	In the case of the synchronization mode, synchronous friction compensation mode, stiffness setup mode, or load change support mode (Pr0.02=1 to 3, 6), updates the parameter based on the setup value.
1	01	B	1st gain of velocity loop	1 to 32767	0.1 Hz	In the case of the synchronization mode, synchronous friction compensation mode, stiffness setup mode, or load change support mode (Pr0.02=1 to 3, 6), updates the parameter based on the setup value.
1	02	B	1st time constant of velocity loop integration	1 to 10000	0.1 ms	In the case of the synchronization mode, synchronous friction compensation mode, stiffness setup mode, or load change support mode (Pr0.02=1 to 3, 6), updates the parameter based on the setup value.
1	04	B	1st time constant of torque filter	0 to 2500	0.01 ms	In the case of the synchronization mode, synchronous friction compensation mode, stiffness setup mode, or load change support mode (Pr0.02=1 to 3, 6), updates the parameter based on the setup value.
1	05	B	2nd gain of position loop	0 to 30000	0.1/s	In the case of the synchronization mode, synchronous friction compensation mode, stiffness setup mode, or load change support mode (Pr0.02=1 to 3, 6), updates the parameter based on the setup value.
1	06	B	2nd gain of velocity loop	1 to 32767	0.1 Hz	In the case of the synchronization mode, synchronous friction compensation mode, stiffness setup mode, or load change support mode (Pr0.02=1 to 3, 6), updates the parameter based on the setup value.
1	07	B	2nd time constant of velocity loop integration	1 to 10000	0.1 ms	In the case of the synchronization mode, synchronous friction compensation mode, stiffness setup mode, or load change support mode (Pr0.02=1 to 3, 6), updates the parameter based on the setup value.
1	09	B	2nd time constant of torque filter	0 to 2500	0.01 ms	In the case of the synchronization mode, synchronous friction compensation mode, stiffness setup mode, or load change support mode (Pr0.02=1 to 3, 6), updates the parameter based on the setup value.
6	48	B	Adjust filter	0 to 2000	0.1 ms	In the case of the synchronization mode, synchronous friction compensation mode, stiffness setup mode, or load change support mode (Pr0.02=1 to 3, 6), updates the parameter based on the setup value.

Real-time auto tuning function sets the following parameters to the fixed value.

■ **Relevant parameters**

Class	No.	Attribute	Title	Range	Unit	Function
1	03	B	1st filter of velocity detection	0 to 5	-	In the case of the synchronization mode, synchronous friction compensation mode, stiffness setup mode, or load change support mode (Pr0.02=1 to 3, 6), set the parameter to 0.
1	08	B	2nd filter of velocity detection	0 to 5	-	In the case of the synchronization mode, synchronous friction compensation mode, stiffness setup mode, or load change support mode (Pr0.02=1 to 3, 6), set the parameter to 0.
1	10	B	Velocity feed forward gain	0 to 4000	0.1 %	In the case of the synchronization mode, synchronous friction compensation mode, stiffness setup mode, or load change support mode (Pr0.02=1 to 3, 6), set the parameter to 1000 (100%).
1	11	B	Velocity feed forward filter	0 to 6400	0.01 ms	In the case of the synchronization mode, synchronous friction compensation mode, stiffness setup mode, or load change support mode (Pr0.02=1 to 3, 6), set the parameter to 0 (invalid).
1	12	B	Torque feed forward gain	0 to 2000	0.1 %	In the case of the synchronization mode, synchronous friction compensation mode, stiffness setup mode, or load change support mode (Pr0.02=1 to 3, 6), set the parameter to 1000 (100%).
1	13	B	Torque feed forward filter	0 to 6400	0.01 ms	In the case of the synchronization mode, synchronous friction compensation mode, stiffness setup mode, or load change support mode (Pr0.02=1 to 3, 6), set the parameter to 0 (invalid).
6	7	B	Torque command additional value	-100 to 100	%	In the case of the synchronous friction compensation mode (Pr0.02=2) or load characteristic update mode (Pr0.02=4), set the parameter to 0.
6	10	B	Function expansion setup	-32768 to 32767	-	In the case of the synchronization mode, synchronous friction compensation mode, stiffness setup mode, or load change support mode (Pr0.02=1 to 3, 6), set the parameter to bit4=1.
6	49	B	Adjust/Torque command attenuation term	0 to 99	-	In the case of the synchronization mode, synchronous friction compensation mode, stiffness setup mode, or load change support mode (Pr0.02=1 to 3, 6), set the tenths digit to 1 and maintain the unit digit.

The Real-time automatic tuning sets the following parameters or uses the current settings, depending on Pr0.02 "Real-time auto-gain tuning setup".

■ **Relevant parameters**

Class	No.	Attribute	Title	Range	Unit	Function
1	14	B	2nd gain setup	0 to 1	-	Sets to 1 if the case of the synchronization mode, synchronous friction compensation mode, stiffness setup mode, or load change support mode (Pr0.02=1 to 3, 6).
1	15	B	Mode of position control switching	0 to 10	-	Sets to 0 if the case of the synchronization mode, synchronous friction compensation mode, stiffness setup mode, or load change support mode (Pr0.02=1 to 3, 6).
1	16	B	Delay time of position control switching	0 to 10000	0.1 ms	Sets to 10 if the case of the synchronization mode, synchronous friction compensation mode, stiffness setup mode, or load change support mode (Pr0.02=1 to 3, 6).
1	17	B	Level of position control switching	0 to 20000	-	Sets to 0 if the case of the synchronization mode, synchronous friction compensation mode, stiffness setup mode, or load change support mode (Pr0.02=1 to 3, 6).
1	18	B	Hysteresis at position control switching	0 to 20000	-	Sets to 0 if the case of the synchronization mode, synchronous friction compensation mode, stiffness setup mode, or load change support mode (Pr0.02=1 to 3, 6).
1	19	B	Position gain switching time	0 to 10000	0.1 ms	Sets to 10 if the case of the synchronization mode, synchronous friction compensation mode, stiffness setup mode, or load change support mode (Pr0.02=1 to 3, 6).
1	20	B	Mode of velocity control switching	0 to 5	-	Sets to 0 if the case of the synchronization mode, synchronous friction compensation mode, stiffness setup mode, or load change support mode (Pr0.02=1 to 3, 6).

(To be continued)

Class	No.	Attribute	Title	Range	Unit	Function
1	21	B	Delay time of velocity control switching	0 to 10000	0.1 ms	Sets to 0 if the case of the synchronization mode, synchronous friction compensation mode, stiffness setup mode, or load change support mode (Pr0.02=1 to 3, 6).
1	22	B	Level of velocity control switching	0 to 20000	-	Sets to 0 if the case of the synchronization mode, synchronous friction compensation mode, stiffness setup mode, or load change support mode (Pr0.02=1 to 3, 6).
1	23	B	Hysteresis at velocity control switching	0 to 20000	-	Sets to 0 if the case of the synchronization mode, synchronous friction compensation mode, stiffness setup mode, or load change support mode (Pr0.02=1 to 3, 6).
1	24	B	Mode of torque control switching	0 to 3	-	Sets to 0 if the case of the synchronization mode, synchronous friction compensation mode, stiffness setup mode, or load change support mode (Pr0.02=1 to 3, 6).
1	25	B	Delay time of torque control switching	0 to 10000	0.1 ms	Sets to 0 if the case of the synchronization mode, synchronous friction compensation mode, stiffness setup mode, or load change support mode (Pr0.02=1 to 3, 6).
1	26	B	Level of torque control switching	0 to 20000	-	Sets to 0 if the case of the synchronization mode, synchronous friction compensation mode, stiffness setup mode, or load change support mode (Pr0.02=1 to 3, 6).
1	27	B	Hysteresis at torque control switching	0 to 20000	-	Sets to 0 if the case of the synchronization mode, synchronous friction compensation mode, stiffness setup mode, or load change support mode (Pr0.02=1 to 3, 6).

In case Pr 0.02 "Real-time auto-gain tuning setup" = 1 to 3, the following settings and parameters are set automatic for enable/disable state of Pr 6.10 "Function expansion setup" load variation suppression function automatic adjustment.

■ Relevant parameters

Class	No.	Attribute	Title	Range	Unit	Function
6	10	B	Function expansion setup	-32768 to 32767	-	When set to Pr 6.10 bit14=1, load variation suppression function will become enabled (bit1 = 1). When set to Pr 6.10 bit14=0, it is disabled(bit1 = 0).
6	23	B	Load change compensation gain	-100 to 100	%	When set to Pr 6.10 bit14=1, sets to 90%. When set to Pr 6.10 bit14=0, sets to 0%.
6	24	B	Load change compensation filter	10 to 2500	0.01 ms	When set to Pr 6.10 bit14=1, updates to match rigidity. When set to Pr 6.10 bit14=0, value is held.
6	73	B	Load estimation filter	0 to 2500	0.01 ms	When set to Pr 6.10 bit14=1, sets to 0.13 ms. When set to Pr 6.10 bit14=0, sets to 0 ms.
6	74	B	Torque compensation frequency 1	0 to 5000	0.1 Hz	Regardless value of the Pr 6.10 bit 14, sets to 0.
6	75	B	Torque compensation frequency 2	0 to 5000	0.1 Hz	Regardless value of the Pr 6.10 bit 14, sets to 0.
6	76	B	Load estimation count	0 to 8	-	When set to Pr 6.10 bit14=1, sets to 4. When set to Pr 6.10 bit14=0, sets to 0.

In case Pr 0.02 "Real-time auto-gain tuning setup" = 6 (load fluctuation response mode), the setting will be changed to the following.

■ **Relevant parameters**

Class	No.	Attribute	Title	Range	Unit	Function
6	10	B	Function expansion setup	-32768 to 32767	-	Load fluctuation suppression function always become enabled (bit1 = 1, bit2=1, bit14=1)
6	23	B	Load change compensation gain	-100 to 100	%	Sets to 100%.
6	24	B	Load change compensation filter	10 to 2500	0.01 ms	Updates to match rigidity.
6	73	B	Load estimation filter	0 to 2500	0.01 ms	Sets to 0.13 ms.
6	74	B	Torque compensation frequency 1	0 to 5000	0.1 Hz	Updates to match rigidity.
6	75	B	Torque compensation frequency 2	0 to 5000	0.1 Hz	Updates to match rigidity.
6	76	B	Load estimation count	0 to 8	-	Sets to 4.

How to operate

When Pr0.02 "Real-time auto tuning mode setup" is set to a value other than 0, control parameter is automatically set according to Pr0.03 "Real-time auto tuning machine stiffness setup".

Enter an operation command when about 100 ms has elapsed after the driver module was turned ON. When the load characteristic is correctly estimated, Pr0.04 "Inertia ratio" is updated. With certain mode settings, Pr6.07 "Torque command additional value", Pr6.08 "Positive direction torque compensation value", Pr6.09 "Negative direction torque compensation value", and Pr6.50 "Viscous friction compensating gain" will also be changed.

When the value of Pr0.03 "Real-time auto tuning machine stiffness setup" is increased, the motor responsiveness will be improved. Determine the most appropriate stiffness in relation to the positioning setup time and vibration condition.

Other cautions

- Immediately after the first servo-on upon start up; or after increasing Pr0.03 "Real-time auto tuning machine stiffness setup", abnormal sound or oscillation may be generated until the load characteristics estimation is stabilized. It is not an abnormality if the load characteristic estimation is stabilized soon. If oscillation or abnormal sound lasts or repeats for 3 or more reciprocating operations, however, take the following countermeasures.

(1) Lower the setting value of Pr0.03 "Real-time auto tuning machine stiffness setup".

(2) Set Pr0.02 "Real-time auto tuning setup" to 0 to disable the Real-time auto tuning.

(3) Set Pr 0.04 "Inertial ratio" to the calculational value of the equipment and set Pr6.07 "Torque command additional value", Pr6.08 "Positive direction torque compensation value", Pr6.09 "Negative direction torque compensation value", and Pr6.50 "Viscous friction compensating gain" to 0.

- When abnormal noise and oscillation occurs, Pr0.04 "Inertia ratio", Pr6.07 "Torque command additional value", Pr6.08 "Positive direction torque compensation value", Pr6.09 "Negative direction torque compensation value", and Pr6.50 "Viscous friction compensating gain" might have changed to extreme values. Take the same measures as described in step (3) above in these cases.
- Among the results of real-time auto-gain tuning, Pr0.04 "Inertia ratio", Pr6.07 "Torque command additional value", Pr6.08 "Positive direction torque compensation value", Pr6.09 "Negative direction torque compensation value", and Pr6.50 "Viscous friction compensating gain" will be written to EEPROM every 30 minutes. When you turn on the power again, auto-tuning will be executed using the latest data as initial values. If power is turned off within 30 minutes after the end of the tuning process, the result of the real-time auto-gain tuning is not saved. If the result is not saved, manually write parameters to EEPROM and then turn off power.

- The control gain is updated when the motor is stopped. Therefore, if the motor is not stopped because gain is excessively low or commands are given continually in one direction, the change in the set value for Pr0.03 "Real-time auto tuning machine stiffness setup" may not be reflected. In this case, abnormal sound or oscillation may be generated depending on the stiffness setting that is reflected after the motor stops.After the stiffness setting is changed, be sure to stop the motor once and check that the stiffness setting has been reflected before performing the next operation.

Basic gain parameter setup table

Stiffness	1st gain / 2nd gain				Adjust filter	For load fluctuation suppression function	For load variation support mode (Pr0.02 = 6) only			
	Pr 1.00 Pr 1.05	Pr 1.01 Pr 1.06	Pr 1.02 Pr 1.07	Pr 1.04 Pr 1.09	Pr 6.48 (Note 1)	Pr 6.24	Pr1.00 Pr1.05	Pr6.24	Pr6.74	Pr6.75
	Position [0.1/s]	Speed [0.1 Hz]	Velocity integral [0.1 ms]	Torque [0.01 ms]	Time constant [0.1 ms]	Load fluctuation compensation filter [0.01/ms]	Load fluctuation position loop gain 0.1 [1/s]	Load fluctuation compensation filter [0.01/ms]	Torque compensation frequency L 0.1 [Hz]	Torque compensation frequency H 0.1 [Hz]
0	20	15	3700	1500	155	2500	15	1330	25	7
1	25	20	2800	1100	115	2500	20	990	34	10
2	30	25	2200	900	94	2500	25	800	42	12
3	40	30	1900	800	84	2500	30	660	51	15
4	45	35	1600	600	64	2500	35	570	59	17
5	55	45	1200	500	54	2500	45	440	76	22
6	75	60	900	400	44	2500	60	330	104	30
7	95	75	700	300	34	2120	75	270	129	37
8	115	90	600	300	34	1770	90	220	153	44
9	140	110	500	200	24	1450	110	180	184	53
10	175	140	400	200	23	1140	140	140	231	66
11	320	180	310	126	16	880	180	110	290	83
12	390	220	250	103	13	720	220	90	346	99
13	480	270	210	84	11	590	270	70	413	118
14	630	350	160	65	9	450	350	60	512	146
15	720	400	140	57	8	400	400	50	570	163
16	900	500	120	45	7	320	500	40	678	194
17	1080	600	110	38	6	270	600	40	678	194
18	1350	750	90	30	5	210	750	40	678	194
19	1620	900	80	25	5	180	900	40	678	194
20	2060	1150	70	20	4	140	1150	40	678	194
21	2510	1400	60	16	4	110	1400	40	678	194
22	3050	1700	50	13	3	90	1700	40	678	194
23	3770	2100	40	11	3	80	2100	40	678	194
24	4490	2500	40	9	3	60	2500	40	678	194
25	5000	2800	35	8	2	60	2800	40	678	194
26	5600	3100	30	7	2	50	3100	40	678	194
27	6100	3400	30	7	2	50	3400	40	678	194
28	6600	3700	25	6	2	40	3700	40	678	194
29	7200	4000	25	6	2	40	4000	40	678	194
30	8100	4500	20	5	2	40	4500	40	678	194
31	9000	5000	20	5	2	40	5000	40	678	194

(Note 1) There is that Pr6.48 “Adjust filter” adds 1 to by a combination of driver and motor.

5.2 Manual adjusting function

MINAS A6 Multi series features the automatic gain tuning function, however, there might be some cases where this automatic gain tuning cannot be adjusted properly depending on the limitation on load conditions. Or you might need to readjust the tuning to obtain the optimum response or stability corresponding to each load.

Here we explain this manual gain tuning method by each control mode and function.

- 5.2.1 Block diagram of position control mode
- 5.2.2 Block diagram of velocity control mode
- 5.2.3 Block diagram of torque control mode
- 5.2.4 Block diagram of full-closed control mode
- 5.2.5 Gain switching function
- 5.2.6 Notch filter
- 5.2.7 Damping control
- 5.2.8 Model-type damping filter (Not supported)
- 5.2.9 Feed forward function
- 5.2.10 Load variation suppression function
- 5.2.11 3rd gain switching function
- 5.2.12 Friction torque compensation
- 5.2.13 Hybrid vibration damping function
- 5.2.14 Two-stage torque filter
- 5.2.15 Quadrant projection suppression function
- 5.2.16 Two-degree-of-freedom control mode (with position control)
- 5.2.17 Two-degree-of-freedom control mode (with velocity control)
- 5.2.18 Two-degree-of-freedom control mode (with full-closed control)
- 5.2.19 Two-degree-of-freedom control mode (with torque control)
- 5.2.20 High response current control

5.2.1 Block diagram of position control mode

Position control of MINAS A6 Multi series, there are three modes.

- Profile position mode (pp)
- Cyclic synchronous position mode (csp)
- Homing mode (hm)

Interpolated position mode (ip) is not supported.

■ Block diagram of position control

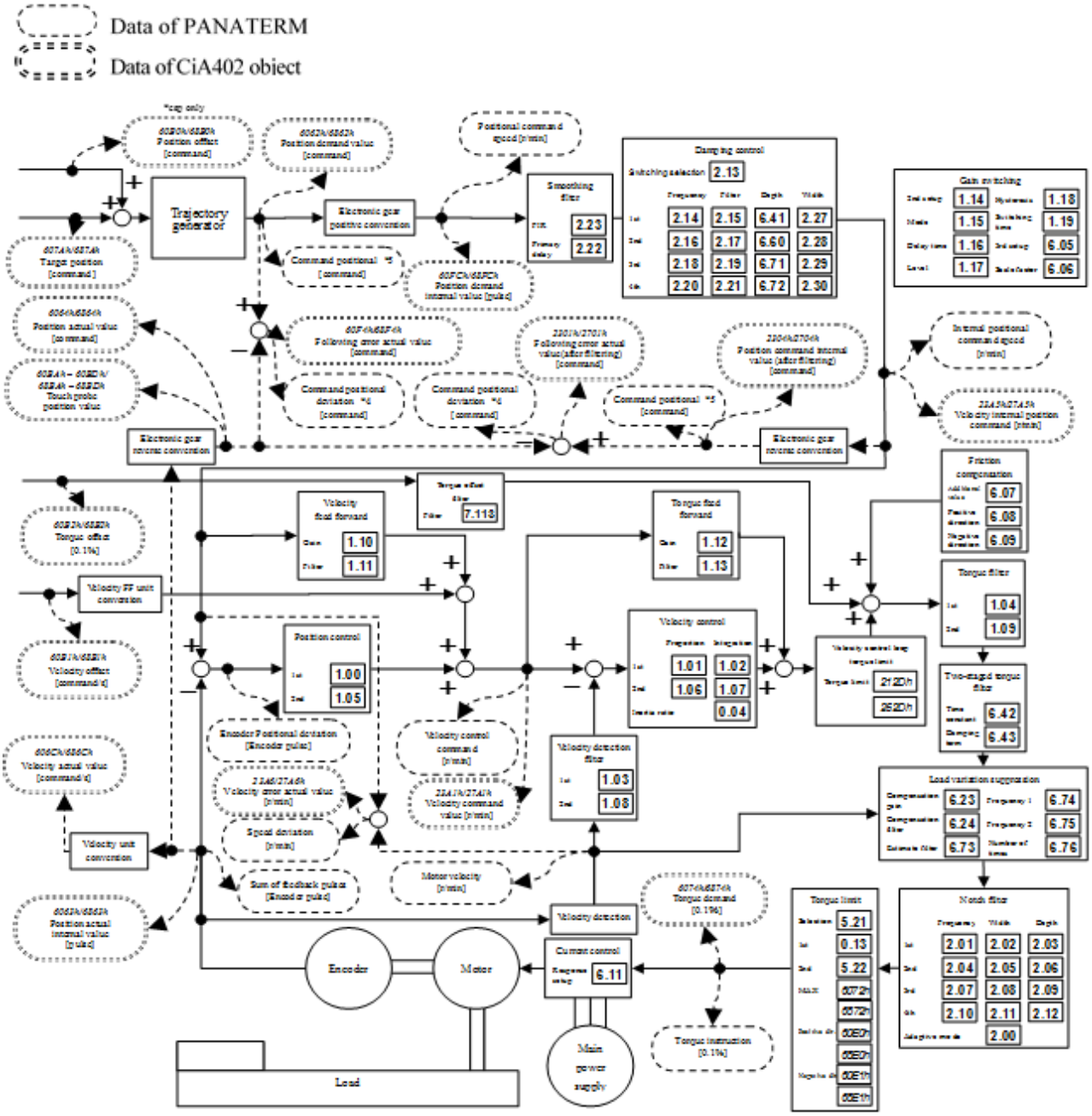

*1 A slanting number shows (ex: 607Ah) the object number of EtherCAT.

*2 A bold letter number shows (ex:1.00) a parameter number.

*3 Polarity was omitted.

*4 The method to calculate the positional deviation on PANATERM for Multi monitor varies depending on the setting of bit14 of Pr7.23 (Communication function extended setup 2).

*5 The position command on PANATERM for Multi can be switched depending on the setting of the bit3 (Command pulse accumulation value) of Pr7.99 (Communication function extended setup 6).

*6 When performing test run function, Z phase search, Frequency characteristic measurement (position loop characteristic) from the PANATERM for Multi, the driver switches to position control mode internally.

5.2.2 Block diagram of velocity control mode

Velocity control of MINAS A6 Multi series, there are two modes.

- Profile velocity mode (pv)
- Cyclic synchronous velocity mode (csv)

■ Block diagram of velocity control

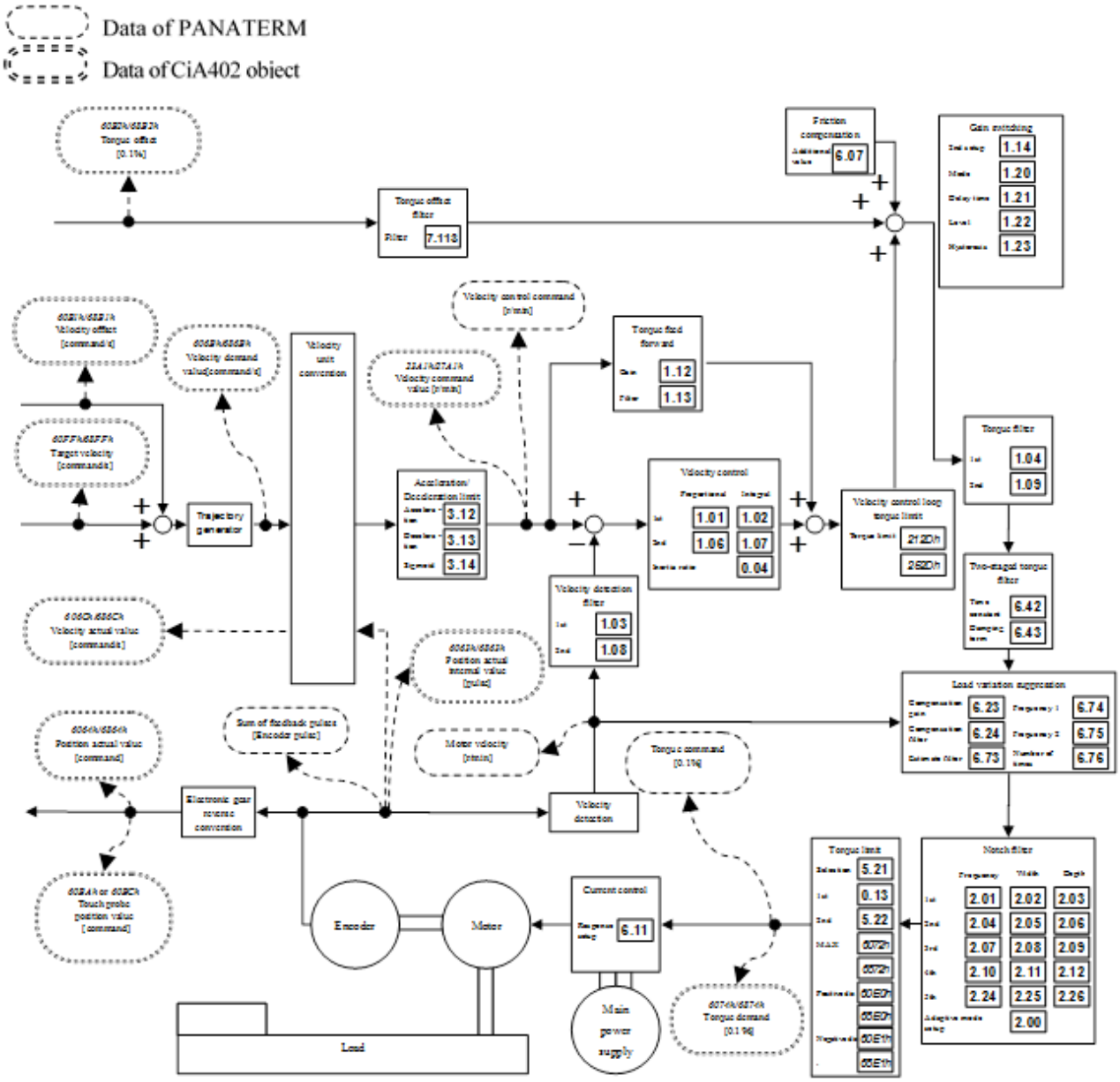

*1 A slanting number shows (ex: 607Ah) the object number of EtherCAT.

*2 A bold letter number shows (ex:1.00) a parameter number.

*3 Polarity was omitted.

*4 When performing Frequency characteristic measurement (speed close loop characteristic, Torque speed [Vertical]) from the PANATERM for Multi, the driver switches to velocity control mode internally.

5.2.3 Block diagram of torque control mode

Telocity control of MINAS A6 Multi series, there are two modes.

- Profile torque mode (tq)
- Cyclic synchronous torque mode (cst)

■ Block diagram of torque control

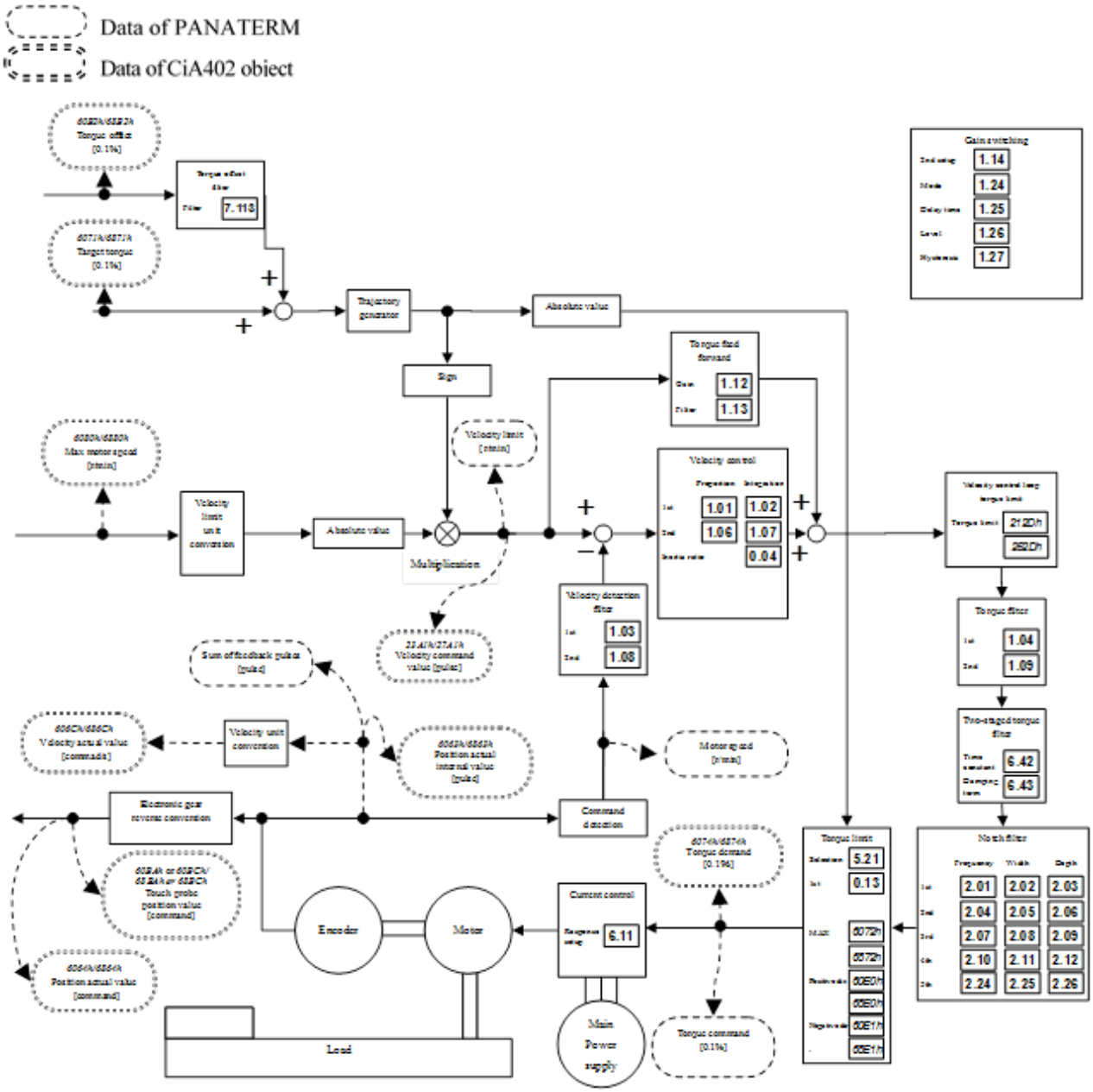

*1 A slanting number shows (ex: 607Ah) the object number of EtherCAT.

*2 A bold letter number shows (ex:1.00) a parameter number.

*3 Polarity was omitted.

*4 When performing Frequency characteristic measurement (Torque speed [normal]) from the PANATERM for Multi, the driver switches to torque control mode internally.

*5 Torque control under two-degrees-of-freedom control mode executes a similar control as torque control under the conventional control mode.

5.2.4 Block diagram of full-closed control mode

Full-closed control of MINAS A6 Multi series, there are three modes.

- Profile position mode (pp)
- Cyclic synchronous position mode (csp)
- Homing mode (hm)

Interpolated position mode (ip) is not supported.

■ Block diagram of full-closed control

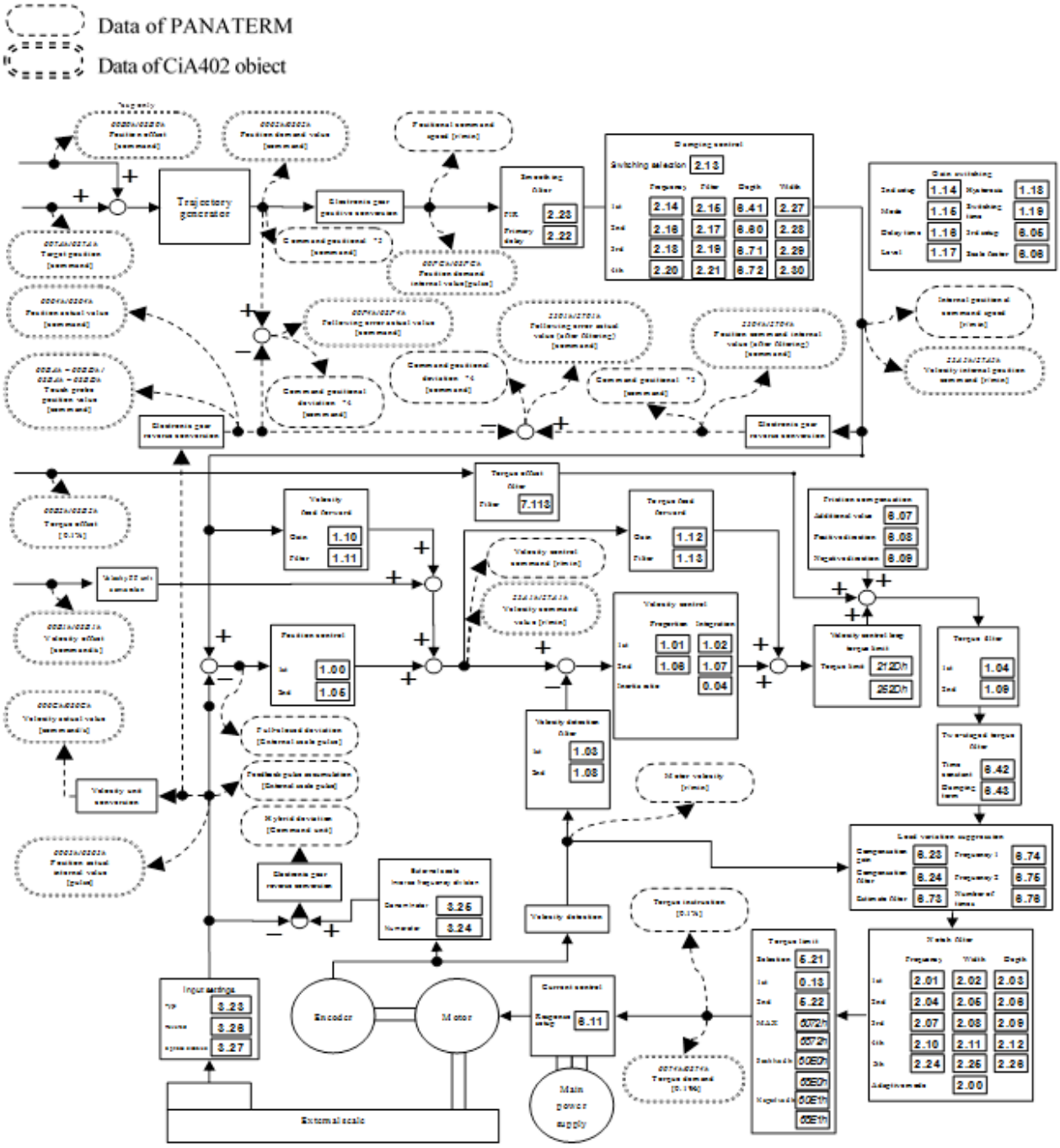

*1 A slanting number shows (ex: 607Ah) the object number of EtherCAT.

*2 A bold letter number shows (ex:1.00) a parameter number.

*3 Polarity was omitted.

*4 The method to calculate the positional deviation on PANATERM for Multi and Analog monitor varies depending on the setting of bit14 of Pr 7.23 (Communication function extended setup 2).

*5 The position command on PANATERM for Multi can be switched depending on the setting of the bit3 (Command pulse accumulation value) of Pr7.99(Communication function extended setup 6).

5.2.5 Gain switching function

By selecting appropriate gain based on internal data or external signal, the following effects can be obtained.

- Decrease the gain at the time of stoppage (servo lock) to reduce vibration.
- Increase the gain at the time of stoppage (setting) to shorten the settling time.
- Increase the gain during operation to improve command compliance.
- Based on condition of the equipment, change the gain with external signal.

Relevant parameters

Set the gain switching function using the following parameters.

■ **Relevant parameters**

<table>
<tr><th>Class</th><th>No.</th><th>Attribute</th><th>Title</th><th>Range</th><th>Unit</th><th>Function</th></tr>
<tr><td>1</td><td>14</td><td>B</td><td>2nd gain setup</td><td>0 to 1</td><td>-</td><td>Arrange this parameter when performing optimum adjustment by using the gain switching function.
0: It is fixed to the 1st gain.
1: Enable gain switching of 1st gain (Pr 1.00 to Pr 1.04) and 2nd gain (Pr 1.05 to Pr 1.09).</td></tr>
<tr><td>1</td><td>15</td><td>B</td><td>Mode of position control switching</td><td>0 to 10</td><td>-</td><td>Set up the triggering condition of gain switching for position control.
<table>
<tr><th>Setup value</th><th>Switching condition</th></tr>
<tr><td>0</td><td>Fixed to 1st gain</td></tr>
<tr><td>1</td><td>Fixed to 2nd gain</td></tr>
<tr><td>2</td><td>For manufacturer’s use</td></tr>
<tr><td>3</td><td>Torque command</td></tr>
<tr><td>4</td><td>Invalid (Fixed to 1st gain)</td></tr>
<tr><td>5</td><td>Velocity command</td></tr>
<tr><td>6</td><td>Position deviation</td></tr>
<tr><td>7</td><td>Position command exists</td></tr>
<tr><td>8</td><td>Not in positioning complete</td></tr>
<tr><td>9</td><td>Actual speed</td></tr>
<tr><td>10</td><td>Position command exists + Actual speed</td></tr>
</table></td></tr>
<tr><td>1</td><td>16</td><td>B</td><td>Delay time of position control switching</td><td>0 to 10000</td><td>0.1 ms</td><td>For position controlling: When shifting from the 2nd gain to the 1st gain with Pr 1.15 Position control gain switching mode set at 3, 5, 6, 7, 8, 9 or 10, set up the delay time from trigger detection to the switching operation.</td></tr>
<tr><td>1</td><td>17</td><td>B</td><td>Level of position control switching</td><td>0 to 20000</td><td>Mode dependent</td><td>For position controlling: Set up triggering level when Pr 1.15 “Position control gain switching mode” is set at 3, 5, 6, 9 or 10. Unit of setting varies with switching mode.
▶ Note
Set the level equal to or higher than the hysteresis.</td></tr>
<tr><td>1</td><td>18</td><td>B</td><td>Hysteresis at position control switching</td><td>0 to 20000</td><td>Mode dependent</td><td>For position controlling: Set up triggering hysteresis when Pr 1.15 “Position control gain switching mode” is set at 3, 5, 6, 9 or 10.
Unit of setting varies with switching mode.
▶ Note
When level < hysteresis, the hysteresis is internally adjusted so that it is equal to level.</td></tr>
<tr><td>1</td><td>19</td><td>B</td><td>Position gain switching time</td><td>0 to 10000</td><td>0.1 ms</td><td>For position controlling: If the difference between Pr 1.00 "1st gain of position loop" and Pr 1.05 "2nd gain of poison loop" is large, the increasing rate of position loop gain can be limited by this parameter.
The position loop gain will increase over the time set.</td></tr>
</table>

(To be continued)

<table>
<tr><th>Class</th><th>No.</th><th>Attribute (Note 1)</th><th>Title</th><th>Range</th><th>Unit</th><th>Function</th></tr>
<tr><td>1</td><td>20</td><td>B</td><td>Mode of velocity control switching</td><td>0 to 5</td><td>-</td><td>For velocity controlling: Set the condition to trigger gain switching.
<table>
<tr><th>Setup value</th><th>Switching condition</th></tr>
<tr><td>0</td><td>Fixed to 1st gain</td></tr>
<tr><td>1</td><td>Fixed to 2nd gain</td></tr>
<tr><td>2</td><td>For manufacturer's use</td></tr>
<tr><td>3</td><td>Torque command</td></tr>
<tr><td>4</td><td>Velocity command variation is larger.</td></tr>
<tr><td>5</td><td>Velocity command</td></tr>
</table></td></tr>
<tr><td>1</td><td>21</td><td>B</td><td>Delay time of velocity control switching</td><td>0 to 10000</td><td>0.1 ms</td><td>For velocity controlling: When shifting from the 2nd gain to the 1st gain with Pr 1.20 “Velocity control switching mode” set at 3, 4 or 5, set the delay time from trigger detection to the switching operation.</td></tr>
<tr><td>1</td><td>22</td><td>B</td><td>Level of velocity control switching</td><td>0 to 20000</td><td>Mode dependent</td><td>For velocity controlling: Set up triggering level when Pr 1.20 Velocity control gain switching mode is set at 3, 4 or 5.
Unit of setting varies with switching mode.
Note
Set the level equal to or higher than the hysteresis.</td></tr>
<tr><td>1</td><td>23</td><td>B</td><td>Hysteresis at velocity control switching</td><td>0 to 20000</td><td>Mode dependent</td><td>For velocity controlling: Set up triggering hysteresis when Pr 1.20 “Velocity control gain switching mode” is set at 3, 4 or 5.
Unit of setting varies with switching mode.
Note
When level < hysteresis, the hysteresis is internally adjusted so that it is equal to level.</td></tr>
<tr><td>1</td><td>24</td><td>B</td><td>Mode of torque control switching</td><td>0 to 3</td><td>-</td><td>For torque controlling: Set the condition to trigger gain switching
<table>
<tr><th>Setup value</th><th>Switching condition</th></tr>
<tr><td>0</td><td>Fixed to 1st gain</td></tr>
<tr><td>1</td><td>Fixed to 2nd gain</td></tr>
<tr><td>2</td><td>For manufacturer's use</td></tr>
<tr><td>3</td><td>Torque command</td></tr>
</table></td></tr>
<tr><td>1</td><td>25</td><td>B</td><td>Delay time of torque control switching</td><td>0 to 10000</td><td>0.1 ms</td><td>For torque controlling: When shifting from the 2nd gain to the 1st gain with Pr 1.24 “Torque control switching mode” set at 3, set up the delay time from trigger detection to the switching operation.</td></tr>
<tr><td>1</td><td>26</td><td>B</td><td>Level of torque control switching</td><td>0 to 20000</td><td>Mode dependent</td><td>For torque controlling: Set up triggering level when Pr 1.24 Torque control gain switching mode is set at 3.
Unit varies depending on the setup of mode of control switching.
Note
Set the level equal to or higher than the hysteresis.</td></tr>
<tr><td>1</td><td>27</td><td>B</td><td>Hysteresis at torque control switching</td><td>0 to 20000</td><td>Mode dependent</td><td>For torque controlling: Set up triggering hysteresis when Pr 1.24 Torque control gain switching mode is set at 3.
Unit of setting varies with switching mode.
Note
When level < hysteresis, the hysteresis is internally adjusted so that it is equal to level.</td></tr>
</table>

How to use

Set the gain switching mode for the control mode to be used, and enable the gain switching function through Pr 1.14 2nd gain setup (set Pr 1.14 to 1).

Switching mode (Pr1.15) Setup value	Switching condition	Gain switching condition
0	Fixed to 1st gain	Fixed to the 1st gain (Pr 1.00 to Pr 1.04).
1	Fixed to 2nd gain	Fixed to the 2nd gain (Pr 1.05 to Pr 1.09).
2	For manufacturer's use	Please do not set.
3	Torque command is large	• Shift to the 2nd gain when the absolute value of the torque command exceeded (level + hysteresis) (%) previously with the 1st gain. • Return to the 1st gain when the absolute value of the torque command was kept below (level–hysteresis) (%) previously during delay time with the 2nd gain.
4	Velocity command variation is larger.	• Valid only during velocity control. • Shift to the 2nd gain when the absolute value of the velocity command variations exceeded (level + hysteresis) (10 r/min/s) previously with the 1st gain. • Return to the 1st gain when the absolute value of the velocity command variations was kept below (level–hysteresis) (10 r/min/s) during delay time previously with the 2nd gain. * The 1st gain is fixed while the velocity control is not applied.
5	Velocity command is large	• Valid for position, velocity and full-closed controls. • Shift to the 2nd gain when the absolute value of the velocity command exceeded (level +hysteresis) (r/min) previously with the 1st gain. • Return to the 1st gain when the absolute value of the velocity command was kept below (level- hysteresis) (r/min) previously during delay time with the 2nd gain.
6	Position deviation is large	• Valid for position and full-closed controls. • Shift to the 2nd gain when the absolute value of the positional deviation exceeded (level + hysteresis) (pulse) previously with the 1st gain. • Return to the 1st gain when the absolute value of the positional deviation was kept below (level–hysteresis) (pulse) previously over delay time with the 2nd gain. * Unit of level and hysteresis (pulse) is set as the encoder resolution for positional control and external scale resolution for full-closed control. * The positional deviation in these contents indicates the deviation between the internal command position and actual position after the filter regardless of the set value of Pr7.23: bit 14.
7	Position command exists	• Valid for position and full-closed controls. • Shift to the 2nd gain when the positional command was not 0 previously with the 1st gain. • Return to the 1st gain when the positional command was kept 0 previously during delay time with the 2nd gain.
8	Not in positioning complete	• Valid for position and full-closed controls. • Shift to the 2nd gain when the positioning was not completed previously with the 1st gain. • Return to the 1st gain when the positioning was kept in completed condition previously during delay time with the 2nd gain.
9	Actual speed is large	• Valid for position and full-closed controls. • Shift to the 2nd gain when the absolute value of the actual speed exceeded (level + hysteresis) (r/min) previously with the 1st gain. • Return to the 1st gain when the absolute value of the actual speed was kept below (level -hysteresis) (r/min) previously during delay time with the 2nd gain.
10	Position command exists + Actual speed	• Valid for position and full-closed controls. • Shift to the 2nd gain when the positional command was not 0 previously with the 1st gain. • Return to the 1st gain when the positional command was kept at 0 during the delay time and the absolute value of actual speed was kept below (level–hysteresis) (r/min) previously with the 2nd gain.

How to set

Suppose the load travels from A to B position and the internal status of the drive changes as the figure below shows. Hereunder we explain how to set up the relevant parameters when you use the gain switching function.

◆ PROCEDURE

1. **Set up the conditions for gain switching with the following parameters.**
   - **Pr 1.15 “Mode of position control switching”**
   - **Pr 1.20 “Mode of velocity control switching”**
   - **Pr 1.24 “Mode of torque control switching”**

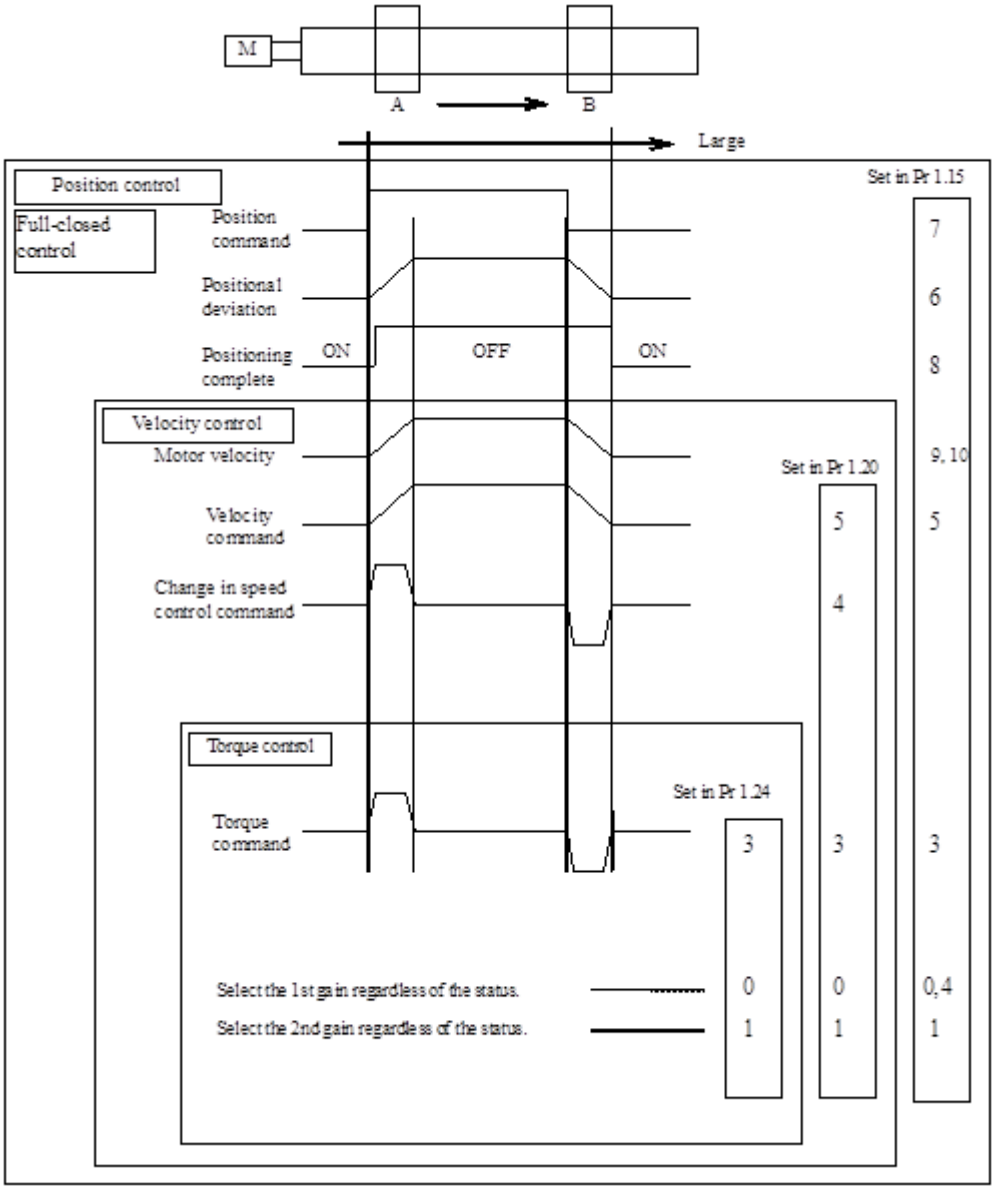

2. Set up the switching level and Hysteresis depending on the switching conditions.

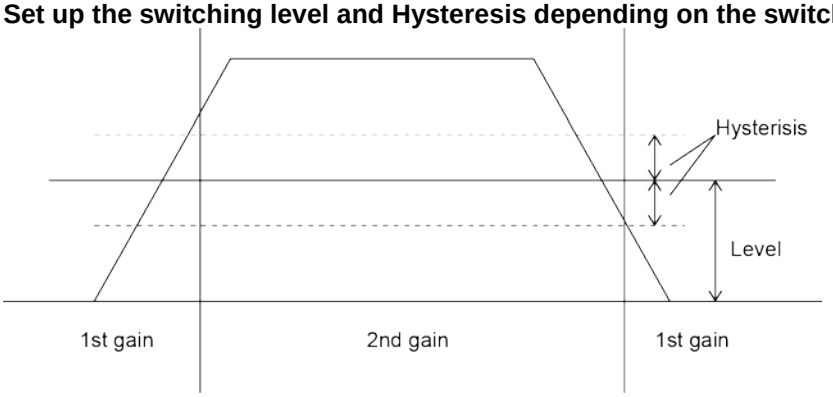

3. Set up the switching delay time.

Set up the time delay for switching from 2nd gain to 1st gain.
Switching conditions have to be established continuously during the switching delay time for the switching from the 2nd to the 1st.

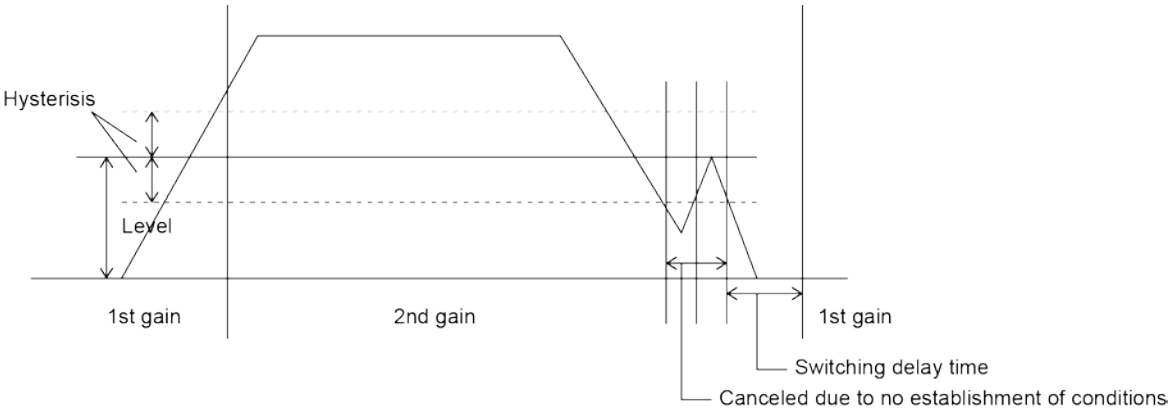

4. Set up the switching time of position gain.

Switch the position loop gain gradually to avoid any trouble caused by a rapid change to a higher gain, while the velocity loop gain, time constant of velocity loop integration, velocity detection filter and time constant of torque filter can be switched instantaneously.

Note
The gain switching flag changes immediately when switching from low gain.

- **Pr 1.19 (Position loop gain switching time) = 0**

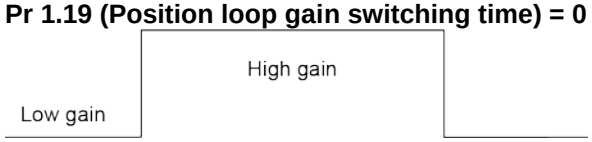

- **Pr 1.19 (Position loop gain switching time) = 2**

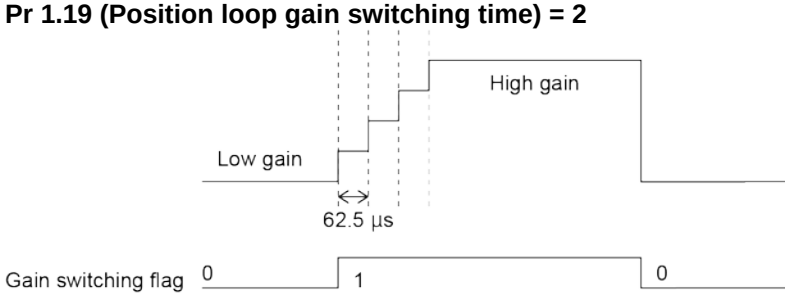

5.2.6 Notch filter

In case of low machine stiffness, you cannot set up a higher gain because vibration and noise occur due to oscillation caused by axis distortion or other causes. By suppressing the resonance peak at the notch filter, higher gain can be obtained or the level of vibration can be lowered.

Relevant parameters

MINAS A6 Multi series feature 5 normal notch filters. You can adjust frequency and width and depth.

■ **Relevant parameters**

Class	No.	Attribute	Title	Range	Unit	Function
2	01	B	1st notch frequency	50 to 5000	Hz	Set the center frequency of the 1st notch filter. The notch filter function will be invalidated by setting up this parameter to “5000”.
2	02	B	1st notch width selection	0 to 20	-	Set the width of notch at the center frequency of the 1st notch filter.
2	03	B	1st notch depth selection	0 to 99	-	Set the depth of notch at the center frequency of the 1st notch filter.
2	04	B	2nd notch frequency	50 to 5000	Hz	Set the center frequency of the 2nd notch filter. The notch filter function will be invalidated by setting up this parameter to “5000”.
2	05	B	2nd notch width selection	0 to 20	-	Set the width of notch at the center frequency of the 2nd notch filter.
2	06	B	2nd notch depth selection	0 to 99	-	Set the depth of notch at the center frequency of the 2nd notch filter.
2	07	B	3rd notch frequency (Note 1)	50 to 5000	Hz	Set the center frequency of the 3rd notch filter. The notch filter function will be invalidated by setting up this parameter to “5000”.
2	08	B	3rd notch width selection (Note 1)	0 to 20	-	Set the width of notch at the center frequency of the 3rd notch filter.
2	09	B	3rd notch depth selection (Note 1)	0 to 99	-	Set the depth of notch at the center frequency of the 3rd notch filter.
2	10	B	4th notch frequency (Note 1)	50 to 5000	Hz	Set the center frequency of the 4th notch filter. The notch filter function will be invalidated by setting up this parameter to “5000”.
2	11	B	4th notch width selection (Note 1)	0 to 20	-	Set the width of notch at the center frequency of the 4th notch filter.
2	12	B	4th notch depth selection (Note 1)	0 to 99	-	Set the depth of notch at the center frequency of the 4th notch filter.
2	24	B	5th notch frequency	50 to 5000	Hz	Set the center frequency of the 5th notch filter. The notch filter function will be invalidated by setting up this parameter to “5000”.
2	25	B	5th notch width selection	0 to 20	-	Set the width of notch at the center frequency of the 5th notch filter.
2	26	B	5th notch depth selection	0 to 99	-	Set the depth of notch at the center frequency of the 5th notch filter.

(Note 1) When the applicable filtering function is used, parameter value is automatically set.

How to use

Determine the resonant frequency by using the frequency response measurement function of the setup support software, resonant frequency monitor or waveform graphics function and set it to the notch frequency.

Notch width and depth

The width of the notch filter is the ratio of the width of –3 dB attenuation frequency band with respect to the notch frequency at its center when depth is 0, and the value is as shown in the table below.

The notch filter depth indicates I/O ratio where the input at the center frequency is completely shut with setup value 0 but fully received with setup value 100. The table below shows this value in dB on the right.

Notch width	
0	0.50
1	0.59
2	0.71
3	0.84
4	1.00
5	1.19
6	1.41
7	1.68
8	2.00
9	2.38
10	2.83
11	3.36
12	4.00
13	4.76
14	5.66
15	6.73
16	8.00
17	9.51
18	11.31
19	13.45
20	16.00

Notch depth	I/O ratio	[dB]
0	0.00	-∞
1	0.01	-40.0
2	0.02	-34.0
3	0.03	-30.5
4	0.04	-28.0
5	0.05	-26.0
6	0.06	-24.4
7	0.07	-23.1
8	0.08	-21.9
9	0.09	-20.9
10	0.10	-20.0
15	0.15	-16.5
20	0.20	-14.0
25	0.25	-12.0
30	0.30	-10.5
35	0.35	-9.1
40	0.40	-8.0
45	0.45	-6.9
50	0.50	-6.0
60	0.60	-4.4
70	0.70	-3.1
80	0.80	-1.9
90	0.90	-0.9
100	1.00	0.0

Notch filter frequency response

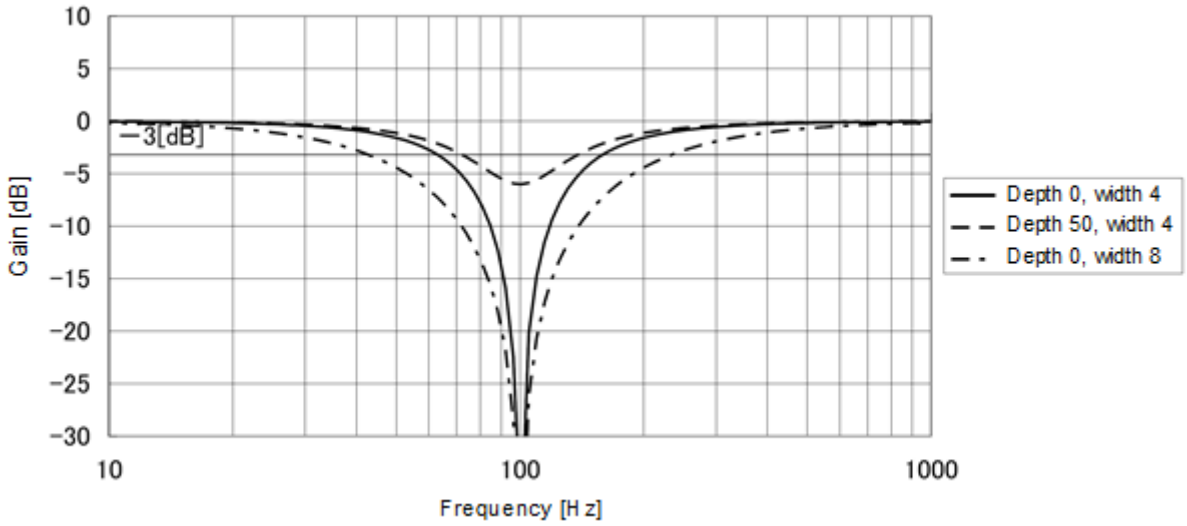

5.2.7 Damping control

This function reduces the vibration at the top or on whole of the equipment by removing the vibration frequency components specified by the positional command. Up to 3 frequency settings, out of 4 settings in total, can be used simultaneously.

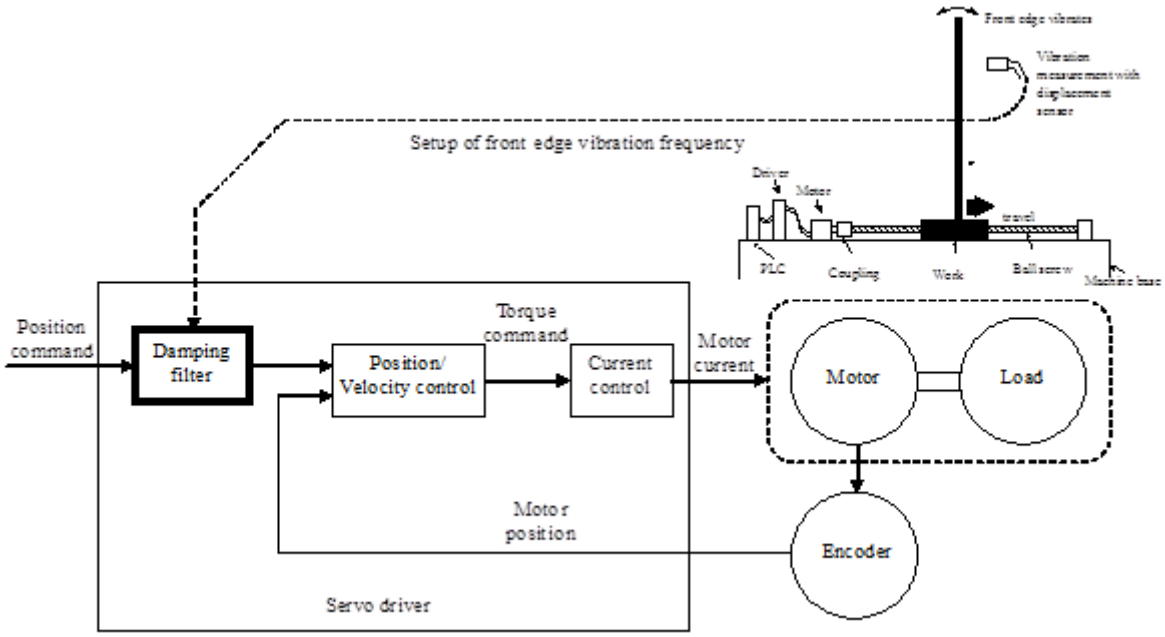

Applicable range

Damping control is activated under the following conditions.

Conditions under which the damping control is activated:

Control Mode	• Position control mode or Full-closed control mode.

Caution

This function does not work properly or no effect is obtained under the following conditions.

Conditions which obstruct the damping control effect:

Load	• Vibration is triggered by other factors than command (such as disturbance). • Ratio of resonance frequency and anti-resonance frequency is large. • Vibration frequency is out of the range of 0.5 to 300.0 [Hz]

Relevant parameters

Set up damping control operation using the parameters shown below.

■ Relevant parameters

<table>
<tr><th>Class</th><th>No.</th><th>Attribute</th><th>Title</th><th>Range</th><th>Unit</th><th>Function</th></tr>
<tr><td>2</td><td>13</td><td>B</td><td>Selection of damping filter switching</td><td>0 to 6</td><td>-</td><td>Among 4 filters select the filters to be used for damping control.

Setup value is 0:
Up to 2 filters can be used simultaneously.
Setup value is 1 or 2:
Reserved for manufacturer's use (do not set this)
Setup value 3:
Select the filter with command direction.
<table>
<tr><th rowspan="2">Pr2.13</th><th rowspan="2">Position command direction</th><th colspan="4">Damping</th></tr>
<tr><th>1st</th><th>2nd</th><th>3rd</th><th>4th</th></tr>
<tr><td>0</td><td>-</td><td>Enabled</td><td>Enabled</td><td>Disabled</td><td>Disabled</td></tr>
<tr><td rowspan="2">3</td><td>Positive direction</td><td>Enabled</td><td>Disabled</td><td>Enabled</td><td>Disabled</td></tr>
<tr><td>Negative direction</td><td>Disabled</td><td>Enabled</td><td>Disabled</td><td>Enabled</td></tr>
</table>

Setting values 4 to 6:
Setting values 4 to 6 can be used only when position control and 2-DOF control mode are disabled. Do not set when full-closed control or 2-degree-of-freedom control mode is enabled.
<table>
<tr><th rowspan="2">Pr2.13</th><th rowspan="2">Position command direction</th><th colspan="4">Damping</th></tr>
<tr><th>1st</th><th>2nd</th><th>3rd</th><th>4th</th></tr>
<tr><td>4</td><td>-</td><td>Enabled</td><td>Enabled</td><td>Enabled</td><td>Disabled</td></tr>
<tr><td>5, 6</td><td>-</td><td colspan="4">Same as Pr2.13=0</td></tr>
</table>

</td></tr>
</table>

Note

(1) Switching between the damping frequency and damping filter setting is performed at the rising edge of the command that causes the number of command pluses per command detection period (0.125 ms) (at upstream of position command filter) changes from 0 to any other value while the positioning complete is being output.

Even if the control mode is changed to position control after changing the damping frequency and damping filter settings during velocity control or torque control, the setting is not changed.

Especially, at higher damping frequency, or if it becomes disabled, and wider positioning complete range is set up, and if large pulse (area is equivalent of time integration of the value of position command at upstream of the filter minus the value of position command at downstream of filter) remains in the filter during switching, it is rapidly discharged upon switching and returns to original position, and the motor will move at a speed higher than normal command velocity.

(2) There is delay from setting change of damping frequency or damping filter to internal computation and application of new setting values. If the switching described in (1) occurs during this delay time, application of new value will be suspended.

Class	No.	Attribute	Title	Range	Unit	Function
2	14	B	1st damping frequency	0 to 3000	0.1 Hz	You can set up the 1st damping frequency of the damping control which suppresses vibration at the load edge. The driver measures vibration at load edge. Setup unit is 0.1 [Hz] The setup frequency is 0.5 to 300.0 [Hz]. Setup of 0 to 4 becomes invalid.
2	15	B	1st damping filter setup	0 to 1500	0.1 Hz	If torque saturation occurs with damping frequency 1st enabled, decrease the setup value, or if the operation is slow, increase it. Usually set it to 0. Note The maximum setup value is internally limited to the corresponding damping frequency or 3000–damping frequency, whichever is smaller.
6	41	B	1st damping depth	0 to 1000	–	Specifies a depth corresponding to the 1st damping frequency. The depth is maximum if the setting value is 0. As the setting value increases, the depth decreases. As the depth increases, the damping effect increases, but the delay also increases. As the depth decreases, the delay decreases, but the damping effect also decreases. Use the parameter to fine adjust the damping effect and delay.
2	27	A	1st damping width setting	0 to 1000	-	Sets the width for the 1st damping frequency. The enabled range of setup is between 10 to 1000 and will operate as set to 100 between the range of 0 to 9. Within the setup range, the width will increase with the increase in the setup value, increasing robustness against vibration fluctuation.
2	16	B	2nd damping frequency	0 to 3000	0.1 Hz	You can set up the 2nd damping frequency of the damping control which suppresses vibration at the load edge. The driver measures vibration at load edge. Setup unit is 0.1 [Hz]. The setup frequency is 0.5 to 300.0 [Hz]. Setup of 0 to 4 becomes invalid.
2	17	B	2nd damping filter setup	0 to 1500	0.1 Hz	If torque saturation occurs with damping frequency 2nd enabled, decrease the setup value, or if the operation is slow, increase it. Usually set it to 0. Note The maximum setup value is internally limited to the corresponding damping frequency or 3000–damping frequency, whichever is smaller.
6	60	A	2nd damping depth	0 to 1000	-	Defines the depth against the 2nd damping frequency. The depth becomes maximum when the setup value is 0. The larger the setup value, the smaller the depth. Although the damping effect increases as the depth becomes larger, the delay becomes large. While the delay decreases as the depth becomes smaller, the damping effect decreases. Use this parameter to fine tune the damping effect and delay.
2	28	A	2nd damping width setting	0 to 1000	-	Sets the width for the 2nd damping frequency. The enabled range of setup is between 10 to 1000 and will operate as set to 100 between the range of 0 to 9.Within the setup range, the width will increase with the increase in the setup value, increasing robustness against vibration fluctuation.
2	18	B	3rd damping frequency	0 to 3000	0.1 Hz	You can set up the 3rd damping frequency of the damping control which suppresses vibration at the load edge. The driver measures vibration at load edge. Setup unit is 0.1 [Hz] The setup frequency is 0.5 to 300.0 [Hz]. Setup of 0 to 4 becomes invalid.
2	19	B	3rd damping filter setup	0 to 1500	0.1 Hz	If torque saturation occurs with damping frequency 3rd enabled, decrease the setup value, or if the operation is slow, increase it. Usually set it to 0. Note The maximum setup value is internally limited to the corresponding damping frequency or 3000–damping frequency, whichever is smaller.

(To be continued)

Class	No.	Attribute (Note 1)	Title	Range	Unit	Function
6	71	A	3rd damping depth	0 to 1000	-	Defines the depth against the 3rd damping frequency. The depth becomes maximum if the setup value is 0. The larger the setup value, the smaller the depth. Although the damping effect increases as the depth becomes larger, the delay becomes large. While the delay decreases as the depth becomes smaller, the damping effect decreases. Use this parameter to fine tune the damping effect and delay.
2	29	A	3rd damping width setting	0 to 1000	-	Sets the width for the 3rd damping frequency. The enabled range of setup is between 10 to 1000 and will operate as set to 100 between the range of 0 to 9. Within the setup range, the width will increase with the increase in the setup value, increasing robustness against vibration fluctuation.
2	20	B	4th damping frequency	0 to 3000	0.1 Hz	You can set up the 4th damping frequency of the damping control which suppresses vibration at the load edge. The driver measures vibration at load edge. Setup unit is 0.1 [Hz] The setup frequency is 0.5 to 300.0 [Hz]. Setup of 0 to 4 becomes invalid.
2	21	B	4th damping filter setup	0 to 1500	0.1 Hz	If torque saturation occurs with damping frequency 4th enabled, decrease the setup value, or if the operation is slow, increase it. Usually set it to 0. Note The maximum setup value is internally limited to the corresponding damping frequency or 3000–damping frequency, whichever is smaller.
6	72	B	4th damping depth	0 to 1000	-	Defines the depth against the 4th damping frequency. The depth becomes maximum if the setup value is 0. The larger the setup value, the smaller the depth. Although the damping effect increases as the depth becomes larger, the delay becomes large. While the delay decreases as the depth becomes smaller, the damping effect decreases. Use this parameter to fine tune the damping effect and delay.
2	30	B	4th damping width setting	0 to 1000	-	Sets the width for the 4th damping frequency. The enabled range of setup is between 10 to 1000 and will operate as set to 100 between the range of 0 to 9. Within the setup range, the width will increase with the increase in the setup value, increasing robustness against vibration fluctuation.

How to use

■ **Setup of damping frequency (1st: Pr 2.14, 2nd: Pr 2.16, 3rd: Pr 2.18, 4th: Pr 2.20)**

Measure the vibration frequency of the front edge of the machine. When you use such instrument as laser displacement meter, and can directly measure the load end vibration, read out the vibration frequency by 0.1 [Hz] from the measured waveform and enter it.

If suitable measuring device is not available, measure the frequency according to the residual vibration of the position deviation waveform measured by the vibration frequency monitor of the setup support software or a waveform graphic function.

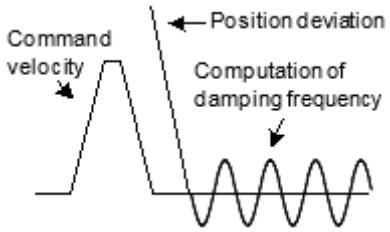

■ **Setup of damping filter (1st: Pr 2.15, 2nd: Pr 2.17, 3rd: Pr 2.19, 4th: Pr 2.21)**

First, set to 0 and check the torque waveform during operation.

You can reduce the settling time by setting up larger value, however, the torque ripple increases at the command changing point as the right fig. shows. Setup within the range where no torque saturation occurs under the actual condition. If torque saturation occurs, damping control effect will be lost.

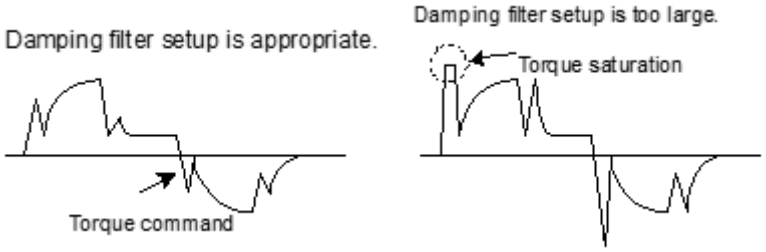

■ **Setup of damping depth (Pr 6.41, Pr 6.60, Pr 6.71, Pr 6.72)**
Setup of damping width (Pr 2.27, Pr 2.28, Pr 2.29, Pr 2.30)

First set it to 0, and increase the setting value little by little if settling time needs to be decreased. As the setting value increases, the settling time can be decreased, but the damping effect is also decreased. Make an adjustment while checking the statuses of the settling time and vibration.

5.2.8 Model-type damping filter (Not supported)

MINAS A6 Multi does not support model-type damping filter.

5.2.9 Feed forward function

- When position control or full closed control is used, positional deviation can be further reduced when compared with deviation where control is made only by feedback, and response is also improved, by calculating the velocity control command necessary for operation based on the internal positional command, and by adding velocity feed forward to the velocity command calculated by comparison with position feedback. In EtherCAT communication, speed feedforward can be set up at 60B1h/68B1h (Velociy offset) apart from this.
- The response time of the velocity control system is also improved by calculating torque command necessary for operation based on the velocity control command and by adding torque feed forward calculated by comparison with velocity feedback to the torque command. In EtherCAT communication, torque feedforward can be set up by 60B2h/68B2h (Torque offset) apart from this.
- The feed forward given through EtherCAT communication is added to the feed forward value (internally calculated according to the parameter setting).

Relevant parameters

For MINAS A6 Multi series, the velocity feed forward and torque feed forward can be used.

■ **Relevant parameters**

Class	No.	Attribute	Title	Range	Unit	Function
1	10	B	Velocity feed forward gain	0 to 4000	0.1%	Multiply the velocity control command calculated according to the internal positional command by the ratio of this parameter and add the result to the velocity command resulting from the positional control process.
1	11	B	Velocity feed forward filter	0 to 6400	0.01 ms	Set the time constant of 1st delay filter which affects the input of velocity feed forward. It becomes invalid in two-degree-of-freedom control mode.
1	12	B	Torque feed forward gain	0 to 2000	0.1%	Multiply the torque command calculated according to the velocity control command by the ratio of this parameter and add the result to the torque command resulting from the velocity control process.
1	13	B	Torque feed forward filter	0 to 6400	0.01 ms	Set up the time constant of 1st delay filter which affects the input of torque feed forward.

Usage example of velocity feed forward

The velocity feed forward will become effective as the velocity feed forward gain is gradually increased with the velocity feed forward filter set at approx. 50 (0.5 ms). The positional deviation during operation at a constant velocity is reduced as shown in the equation below in proportion to the value of velocity feed forward gain.

Positional deviation [unit of command] = command velocity [unit of command/s] / positional loop gain [1/s] x (100–velocity feed forward gain [%]) / 100

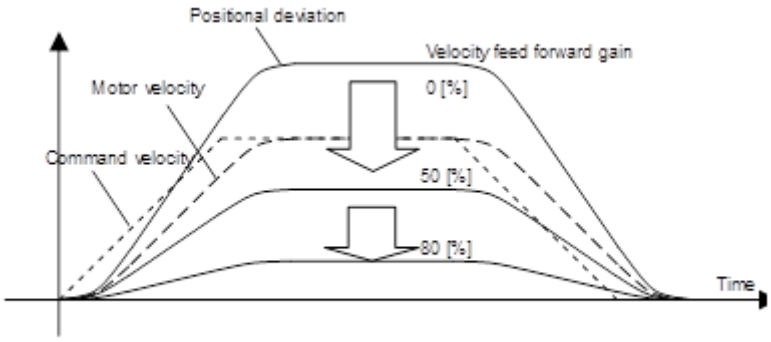

Positional deviation within the constant speed range will reduce as the velocity forward gain is increased.

With the gain set at 100%, calculatory positional deviation is 0, but significant overshoot occurs during acceleration/deceleration.

If the updating cycle of the positional command input is longer than the driver module control cycle, or the pulse frequency varies, the operating noise may increase while the velocity feed forward is active. If this is the case, use positional command filter (1st delay or FIR smoothing), or increase the velocity forward filter setup value.

Usage example of torque feed forward

To use the torque feed forward, correctly set the inertia ratio. Use the value that was determined at the start of the Real-time auto tuning, or set the inertia ratio that can be calculated from the machine specification to Pr 0.04 Inertia ratio.

The torque feed forward will become effective as the torque feed forward gain is gradually increased with the torque feed forward filter is set at approx. 50 (0.5 ms).

Positional deviation at a constant acceleration/deceleration can be minimized close to 0 by increasing the torque forward gain. This means that positional deviation can be maintained at near 0 over entire operation range while driving in trapezoidal speed pattern under ideal condition where disturbance torque is not active.

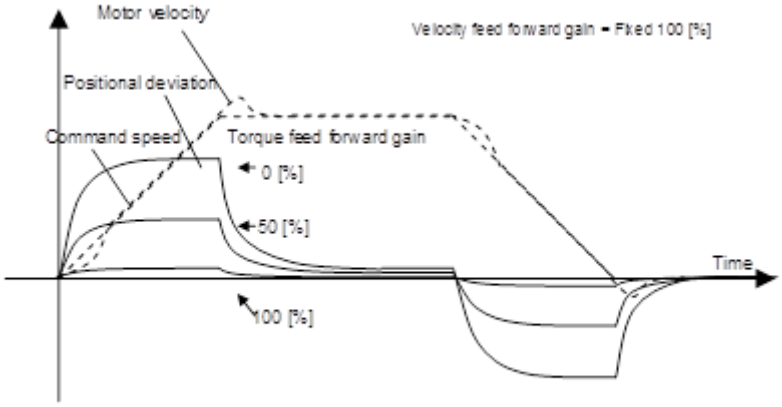

Positional deviation in the region where acceleration is constant can be reduced by torque feed forward.

Zero positional deviation is impossible in actual situation because of disturbance torque.

As with the velocity feed forward, large torque feed forward filter time constant decreases the operating noise but increases positional deviation at acceleration change point.

Note

If the control mode is changed from other than torque control mode to torque control mode while the motor is in operation, torque feed forward may be applied even if torque control mode.

Corresponding control mode

In addition, each feedforward which can setup by EtherCAT communication corresponds to the following control mode.

	csp	pp	ip (Not supported)	hm	csv	pv	cst	tq
60B1h/68B1h (Velocity offset)	Valid ✓	Valid ✓	Valid ✓	Valid ✓	Valid ✓	Valid ✓	Invalid ✕	Invalid ✕
60B2h/68B2h (Torque offset)	Valid ✓	Valid ✓	Valid ✓	Valid ✓	Valid ✓	Valid ✓	Valid ✓	Valid ✓

5.2.10 Load variation suppression function

This function uses the disturbance torque determined by the disturbance observer to reduce effect of disturbance torque and vibration.
This is effective when Real-time auto tuning cannot handle load variation sufficiently.

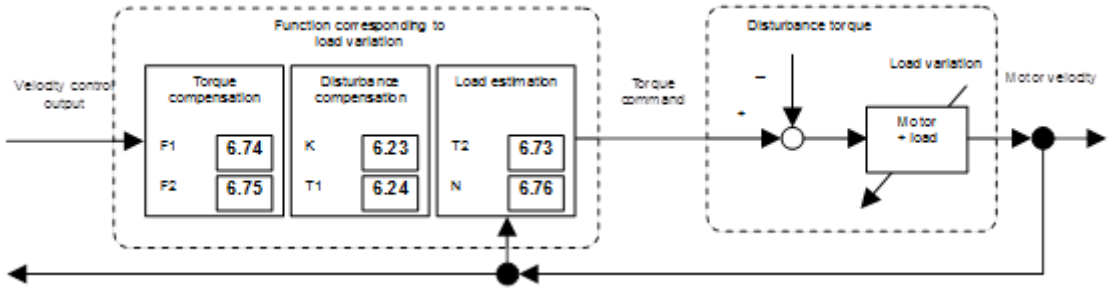

Applicable range

This function can be applicable only when the following conditions are satisfied.

Conditions under which the disturbance observer is activated:

Control Model	• Position control, Velocity control or Full-closed control
Others	• Should be in servo-on condition • Parameters except for controls such as torque limit setup, are correctly set, assuring that the motor can run smoothly.

Caution

Effect may not be expected in the following condition.

Conditions which obstruct disturbance observer action:

Load	• The rigidity is low (the anti-resonance point is at low frequency range of 10 Hz or below) • The load shows a clear non-linear trend with friction and backlash.

Relevant parameters

■ **Relevant parameters**

Class	No.	Attribute	Title	Range	Unit	Function
6	10	B	Function expansion setup	-32768 to 32767	-	Enables or disables the load variation suppression function. bit1: 0: Disables the load variation suppression function 1: Enables the load variation suppression function bit2: 0: Disables the load variation stabilization setting 1: Enables the load variation stabilization setting bit14: 0: Disables the load variation suppression function automatic adjustment 1: Enables the load variation suppression function automatic adjustment * The least significant bit is bit0. * When bit14 to 1, it will be bit1 and 2 also 1.
6	23	B	Load change compensation gain	-100 to 100	%	Defines the compensation gain against load variation.
6	24	B	Load change compensation filter	10 to 2500	0.01 ms	Defines the filter time constant against load variation.
6	73	B	Load estimation filter	0 to 2500	0.01 ms	Defines the filter time constant for load estimation.

(To be continued)

Class	No.	Attribute (Note 1)	Title	Range	Unit	Function
6	74	B	Torque compensation frequency 1	0 to 5000	0.1 Hz	Defines the filter frequency 1 against the velocity control output. Torque compensation is enabled when the relation between Pr. 6.74 "Torque compensation frequency 1" and Pr. 6.75 "Torque compensation frequency 2" satisfies the following formula. 1.0 Hz ≤ Pr. 6.75 ≤ Pr. 6.74 ≤ (Pr. 6.75 x 32)
6	75	B	Torque compensation frequency 2	0 to 5000	0.1 Hz	Defines the filter frequency 2 against the velocity control output. Torque compensation is enabled when the relation between Pr. 6.74 “Torque compensation frequency 1” and Pr. 6.75 “Torque compensation frequency 2” satisfies the following formula. 1.0 Hz ≤ Pr. 6.75 ≤ Pr. 6.74 ≤ (Pr. 6.75 x 32)
6	76	B	Load estimation count	0 to 8	-	Defines the load estimation count.

How to use

There are two methods below for adjusting the load variation suppression function.

■ **Disturbance suppression setting (No load inertia variation)**

◆PROCEDURE

< Basic adjustment >

1. **Make normal gain adjustment in advance.**

   Use real-time auto tuning (Pr. 0.02=1) with the load variation suppression function automatic adjustment disabled (Pr. 6.10 bit14=0), and set stiffness (Pr. 0.03) as high as possible.

2. **Set bit14 to 1 in Pr. 6.10 "Function expansion setup" to enable the load variation suppression function automatic adjustment. As a result, Pr6.10 bit1 becomes 1. And check disturbance suppression effect with the motor rotate.**

   - **This Pr6.10 bit1 and 2 it will be 1.**
   - **Before enabling or disabling the load variation suppression function, turn servo-off first.**
   - **If this change causes the motor to oscillate or generates an abnormal sound, return to Step 1. and decrease the servo rigidity by one or two levels before repeating the subsequent steps.**

< If further adjustment >

3. **Set bit14 to 0 in Pr. 6.10 to disable the automatic adjustment of load variation suppression function.**

4. **Specify a small value as possible in Pr. 6.24 “Load change compensation filter”.**

   Decreasing the filter setup value within the range that does not produce any significant abnormal sound or torque command variation will improve disturbance suppression performance and reduce motor velocity variation and encoder position deviation.

   - **When an abnormal sound at high frequency (1 kHz or above) is generated, increase the value in Pr. 6.76 “Load estimation count. ”**
   - **When vibration at low frequency (10 Hz or below) is produced after operation stops, increase the value in Pr. 6.23 “Load change compensation gain”.**
   - **No change is required for Pr. 6.73 "Load estimation filter" in normal cases, but you can set the optimum point by fine-tuning within the range between around 0.00 and 0.20 ms.**

■ **Load variation stabilization setting (There is load inertia variation, assumed an articulated robot, etc.)**

◆ PROCEDURE

1. **Turn ON the control power in two-degree-of-freedom position control (synchronization type) (Pr. 0.01=0, Pr. 6.47 bit0=1 bit3=1).**
2. **Set the command response filter (Pr. 2.22) to 10ms.**
3. **Set Real-time auto tuning to load variation support mode, and operate the motor in a pattern as large as possible load variation occurs in this state. As a result, Pr6.10 bit1 and bit2 becomes 1.**
4. **Set the stiffness setting (Pr. 0.03) as large as possible.**
5. **Set the command response filter to appropriate value to continue to derease while checking response of the motor. In case of need to the multi-axis trajectory control, change all axes Pr2.22 to the same value and adjust.**

5.2.11 3rd gain switching function

In addition to the normal gain switching function described on "5.2.5 Gain switching function", 3rd gain switching function can be set to increase the gain just before stopping. The higher gain shortens positioning adjusting time.

Applicable range

This function can be applicable only when the following conditions are satisfied.

Conditions under which the 3rd gain switching function is activated:

Control Mode	• Position control mode or Full-closed control mode
Others	• Should be in servo-on condition • Parameters except for controls such as torque limit setup, are correctly set, assuring that the motor can run smoothly.

Relevant parameters

■ **Relevant parameters**

Class	No.	Attribute	Title	Range	Unit	Function
6	05	B	Position 3rd gain valid time	0 to 10000	0.1 ms	Set up the time at which 3rd gain becomes valid.
6	06	B	Position 3rd gain scale factor	50 to 1000	%	Set up the 3rd gain by a multiplying factor of the 1st gain: 3rd gain = 1st gain x Pr 6.06/100

How to use

While in the condition under which the normal gain switching functions, set the 3rd gain application time to Pr 6.05 Position 3rd gain enable time, and set the 3rd gain (scale factor with reference to 1st gain) to Pr 6.06 Position 3rd gain magnification ratio.

- If 3rd gain is not used, set Pr 6.05 to 0 and Pr 6.06 to 100.
- The 3rd gain is enabled only for position control or full closed control(Not supported).
- During the 3rd gain period, only position loop gain/velocity loop gain becomes 3rd gain, during other periods, 1st gain setting is used.
- When the 2nd gain switching condition is established during 3rd gain period, 2nd gain is used.
- During transition from 2nd gain to 3rd gain, Pr 1.19 Position gain switching time is applied.
- Even if the gain is changed from 2nd to the 1st due to parameter change, the 3rd gain period is inserted between them.

Example: Pr 1.15 Mode of position control switching = 7 switching condition: with positional command

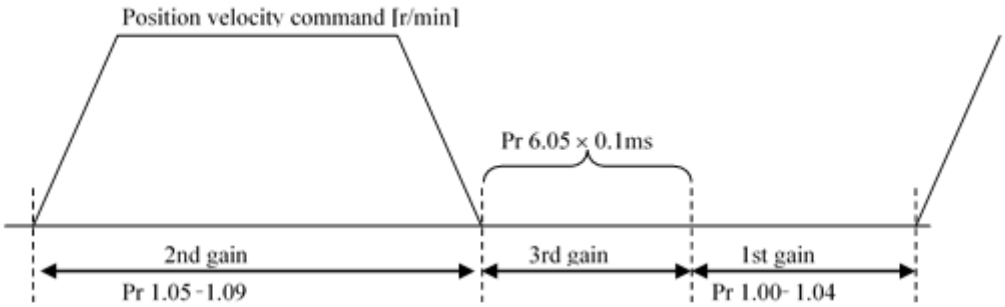

[3rd gain period]
Position loop gain = Pr1.00 × Pr6.06/100
Velocity loop gain = Pr1.01 × Pr6.06/100
Velocity loop integration time constant, velocity detection filter and torque filter time constant directly use the 1st gain value.

5.2.12 Friction torque compensation

To reduce effect of friction represented by mechanical system, 3 types of friction torque compensation can be applied:

- Offset load compensation that cancels constant offset torque
- The dynamic friction compensation that varies direction as the operating direction varies
- Viscous friction torque correction amount that is varied by the command speed

Applicable range

This function can be applicable only when the following conditions are satisfied.

Conditions under which the Friction torque compensation is activated:

Control Mode	• Specific to individual functions. Refer to “Relevant parameters” shown below.
Others	• Should be in servo-on condition • Parameters except for controls such as torque limit setup, are correctly set, assuring that the motor can run smoothly.

Relevant parameters

Combine the following 3 parameters to setup appropriate friction torque compensation.

■ **Relevant parameters**

Class	No.	Attribute	Title	Range	Unit	Function
6	07	B	Torque command additional value	-100 to 100	%	Set up the offset load compensation value usually added to the torque command in a control mode except for the torque control mode.
6	08	B	Positive direction torque compensation value	-100 to 100	%	Dynamic friction compensation value to be added to the torque command at the time of position control and full-closed control and when forward direction position command is entered.
6	09	B	Negative direction torque compensation value	-100 to 100	%	Dynamic friction compensation value to be added to the torque command at the time of position control and full-closed control and when reverse direction position command is entered.
6	50	B	Viscous friction compensating gain	0 to 10000	0.1% (10000r/min)	When Two-degree-of-freedom control mode is effective, the result multiplying the command speed by this setting is added to the torque command as the viscous friction torque correction amount. By setting the estimated viscous friction coefficient of Real-time auto tuning, there are cases in which the feedback scale position deviation in the vicinity of steady state may be improved.

How to use

The friction torque compensation will be added in response to the entered positional command direction as shown below.

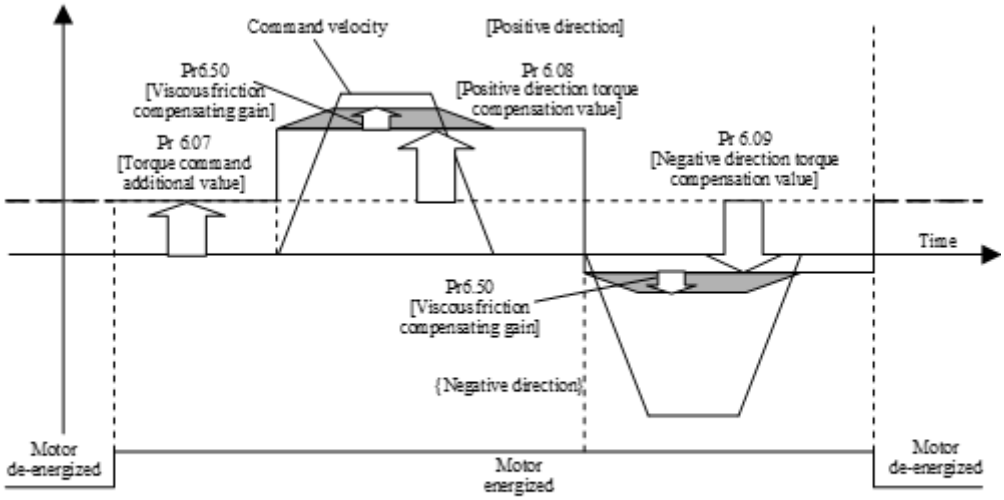

The friction compensation torque is the sum of the offset load compensation value which is set according to the torque instruction additional value (always constant) and the dynamic friction compensation torque which is set according to positive/negative direction torque compensation value.
The command velocity direction is reset upon power-up or when the motor is de-energized.

- Pr 6.07 "Torque command additional value" reduces variations in positioning operation (performance is affected by direction of movement). These variations occur when constant offset torque resulting from weight on vertical axis is applied to the motor.
- Pr6.08 "Positive direction torque compensation value" and Pr6.09 "Negative direction torque compensation value" are loads that require large dynamic friction torque due to radial load, such as belt drive shafts. By setting, the deterioration and variation of positioning settling time due to dynamic friction can be reduced.
- Pr6.50 "viscous friction compensation gain" reduces response delay at the time of acceleration by setting a torque command value against viscous load. Because of its properties, the compensation is proportional to the speed command value.

The offset load compensation and dynamic friction compensation can be used individually or in combination. However, some control modes impose limit on application.

- For torque control:
  Offset load compensation and dynamic friction compensation are set at 0 regardless of parameter setting.
- For velocity control with servo-off:
  Offset load compensation per Pr 6.07 is enabled. Dynamic friction compensation is set at 0 regardless of parameter setting.
- For position control or full closed control(Not supported) with servo-on:
  Previous offset load compensation and dynamic friction compensation values are maintained until the first positional command is applied where the offset load compensation value is updated according to Pr 6.07. The dynamic friction compensation value is updated to parameters Pr .6.08 and Pr 6.09 depending on command direction.

5.2.13 Hybrid vibration damping function

A function to suppress vibration arising from the twist amount between the motor and the load in the Full-closed control mode. This function enables high setting of gains.

Applicable range

This function is unable to be applied unless the following conditions are satisfied.

Conditions in which hybrid vibration suppression functions are activated:

Control Mode	• Full-closed control mode
Others	• To be in the servo ON state. • Parameters except for controls such as torque limit setup, are correctly set, assuring that the motor can run smoothly.

Cautions

This function is effective when the twist amount between the motor shaft and the load is great. When the twist amount is small, there are cases in which the effect may be small.

Relevant parameters

Combining the following parameters, hybrid vibration suppression function is set.

■ **Relevant parameters**

Class	No.	Attribute	Title	Range	Unit	Function
6	34	B	Hybrid vibration suppression gain	0 to 30000	0.1/s	Set hybrid vibration suppression gain. Basically, set the same value as the position loop gain and finely adjust while monitoring the conditions.
6	35	B	Hybrid vibration suppression filter	0 to 32000	0.01 ms	Set the hybrid vibration suppression filter.

How to use

◆ **PROCEDURE**

1. **Set Pr6.34 “Hybrid vibration suppression gain” to be same as the position loop gain.**
2. **While driving in the full-closed control, increase the setting of Pr6.35 "hybrid vibration suppression filter" gradually and check changes of response. If response seems to be improved, while adjusting Pr6.34 and Pr6.35, find a combination that can achieve the optimum response.**

5.2.14 Two-stage torque filter

In addition to usual 1st and 2nd torque filters (Pr1.04 and Pr1.09), another torque filter can be set. High-frequency vibration component can be suppressed by the use of the 2-stage torque filter.

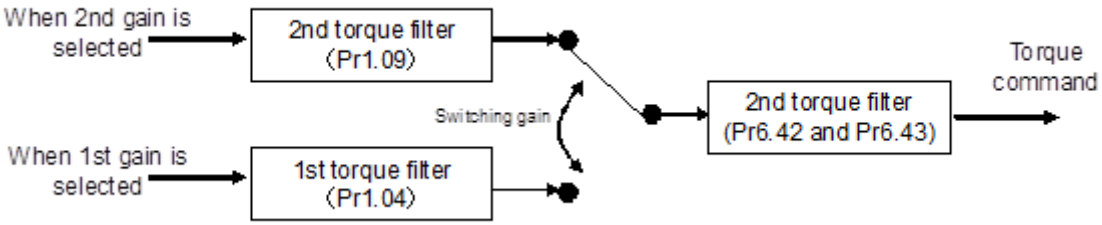

Applicable range

This function can't be applied unless the following conditions are satisfied.

Conditions for operating 2-stage torque filter:

Control Mode	• Can be used in all control modes.
Others	• In servo-ON state • Elements, such as deviation counter clear command input inhibition and torque limit, other than control parameter are set properly, and motor is running without any problem.

Cautions

- If the setting value is increased excessively, the control may become unstable to produce vibration. Specify proper setting value while checking the status of the device.
- If Pr6.43 "2-stage torque filter attenuation term" is changed during operation, vibration may be generated. Change the value while the motor is stopped.

Relevant parameters

■ **Relevant parameters**

Class	No.	Attribute	Title	Range	Unit	Function
6	42	B	2-stage torque filter time constant	0 to 2500	0.01ms	Sets 2-stage torque filter time constant. The time constant is invalid if 0 is specified. [When used for the secondary filter as Pr6.43 ≥ 50] The time constants that can be used are 4 to 159 (0.04 to 1.59 ms). (Equivalent to 100 to 4000 Hz in frequency) Setting values 1 to 3 works as 4 (4000 Hz), and 159 to 2500 works as 159 (100 Hz).
6	43	B	2-stage torque filter attenuation term	0 to 1000	-	Sets attenuation term of 2-stage torque filter. The filter degree of the 2-stage torque filter is changed according to the setting value. 0 to 49: Operates as the 1st filter. 50 to 1000: Operates as a 2nd filter and becomes a 2nd filter with ζ = 1.0 if setting value is 1000. As the setting value is decreased, the filter becomes vibrational. Use with a setting value 1000 basically.

How to use

Set a 2-stage torque filter if high-frequency vibration can't be removed only using usual 1st and 2nd torque filters. Setting Pr6.43 "2-stage torque filter attenuation term" to 1000 (ζ=1.0), adjust Pr6.42 "2-stage torque filter time constant".

5.2.15 Quadrant projection suppression function

Control configuration can be switched to suppress quadrant projection occurring during arc interpolation of 2 or more axes. To be used in conjunction with load fluctuation suppression function.

Applicable range

This function is unable to be applied unless the following conditions are satisfied.

Conditions in which quadrant projection suppression function is triggered:

Control Mode	• Position control mode or Full-closed control mode.
Others	• To be in Servo-On state. • Elements other than control parameters, such as prohibition of deviation counter clear command input and torque limit, etc. are set appropriately, in a state where there are no obstructions in normal motor revolutions.

Cautions

There are cases where effects cannot be observed under the following conditions.

Conditions where the effects of quadrant projection suppression function is disrupted:

Load	• When rigidity is low (anti-resonance point exists in the low frequency range of 10 Hz or lower) • When non-linearity of load is strong from existence of backlash, etc. • When action patterns are changed.

Relevant parameters

■ **Relevant parameters**

Class	No.	Attribute	Title	Range	Unit	Function
5	45	B	Quadrant glitch positive-direction compensation value	-1000 to 1000	0.1%	Sets amount of compensation to be added to torque command when the position command is in positive direction and quadrant projection compensation function is enabled.
5	46	B	Quadrant glitch negative-direction compensation value	1000 to 1000	0.1%	Sets amount of compensation to be added to torque command when the position command is in negative direction and quadrant projection compensation function is enabled.
5	47	B	Quadrant glitch compensation delay time	0 to 1000	ms	Sets the length of delay time for switching of amount of compensation after position command has been reversed, when quadrant projection compensation function is enabled.
5	48	B	Quadrant glitch compensation filter setting L	0 to 6400	0.01 ms	Sets time constant for low-pass filter on the amount of compensation on torque command when quadrant projection compensation function is enabled.
5	49	B	Quadrant glitch compensation filter setting H	0 to 10000	0.1 ms	Sets time constant for high-pass filter on the amount of compensation on torque command when quadrant projection compensation function is enabled.
6	47	R	Function expansion setup 2	-32768 to 32767	-	bit14:Enables/disables quadrant projection compensation function. 0: disabled 1: enabled
6	97	B	Function expansion setup 3	-2147483648 to 2147483647	-	bit0: Enables/disables quadrant projection compensation function extended. 0: disabled 1: enabled Note To set the compensation amount of quadrant projection by inversion direction when the direction of the velocity has changed, set Pr6.97 bit0 to 1.

How to use

Adjust the load change inhibit function using the disturbance suppression setup by reference to Section "5.2.10 Load variation suppression function", and measure quadrant projection.
Level is unsatisfactory, conduct further fine adjustment using quadrant projection suppression function.

◆PROCEDURE

1. **Reclose control power supply after enabling quadrant projection suppression function (Pr 6.47 bit14 = 1)**
2. **Set initial values to: Pr 5.47 = 0, Pr 5.48 = Pr 1.04, Pr 5.49 =0.**
3. **Measure the magnitude of quadrant projection and conduct fine adjustments to Pr 5.45 and Pr 5.46 of each axis.**
   - **When quadrant projection is delayed from the timing of the movement direction is reversed, try changing Pr 5.47 and Pr 5.48.**
   - **To set the compensation amount of quadrant projection by inversion direction when the direction of the velocity has changed, set Pr6.97 bit0 to 1 and try change Pr5.49.**

5.2.16 Two-degree-of-freedom control mode (with position control)

The two-degree-of-freedom control mode is an expanded function of the position control switching mode. Responsiveness is improved by making it possible to set the positional command response and servo stiffness independently.

Either of the standard type or synchronization type of the two-degree-of-freedom control can be used.

Applicable range

This function cannot be applied unless the following conditions are satisfied.

Operating conditions for the two-degree-of-freedom control mode:

Control Mode	• Position control mode (semi-close control)
Others	• The servo is ON. • Elements other than control parameters such as torque limit are set properly, and there is no obstacle to normal motor operation.

Relevant parameters

First, set Pr6.47 "Function expansion setup 2" to bit0=1 and write the setting to EEPROM, and then reset the control power to enable two-degree-of-freedom control.

After this, make adjustments of the Real-time auto tuning function.

Refer to

Refer to Section "5.1.35.1.3Real-time auto tuning (Two-degree-of-freedom control mode standard type) " or "5.1.4 Real-time auto tuning (Two-degree-of-freedom control mode synchronization type)"

Only when further improvement is required, manually fine-tune the following parameters while confirming the response.

■ **Relevant parameters**

Class	No.	Attribute	Title	Range	Unit	Function
6	47	R	Function expansion setup 2	-32768 to 32767	-	Set respective functions in unit of bit. bit0: two-degree-of-freedom control mode 0: Invalid 1: Valid bit3: Selection of real-time auto-tuning of two-degree-of-freedom control 0: Standard type 1: Synchronization type * The least significant bit is bit0. * bit3 (Selection of real-time auto-tuning of two-degree-of-freedom control) can be used only when bit0 is set to 1: Valid.
2	22	B	Command smoothing filter	0 to 10000	0.1 ms	Time constant for the command filter is set in two-degree-of-freedom control. • The maximum value is limited to 2000 (=200.0 ms). *The parameter value itself is not limited, but the value applied in the driver is limited. • Command response can be quickened by decreasing this parameter and slowed by increasing it. • The attenuation term is set by Pr6.49 “Adjust/Torque command attenuation term”.

(To be continued)

Class	No.	Attribute	Title	Range	Unit	Function
6	48	B	Adjust filter	0 to 2000	0.1ms	Set the time constant for the adjust filter. • When the torque filter setting has been changed, set a value close to the real-time auto-tuning setting. • As a result of fine-tuning while checking the encoder position deviation near the setting, overshoot and oscillatory waveforms may be improved. • The attenuation term is set by Pr6.49 “Adjust/Torque command attenuation term”.
6	49	B	Command / tuning filter damping	0 to 99	-	Set the attenuation term for the command filter and adjust filter. • A decimal number indication is used. The first digit sets the command filter and the second digit sets the adjust filter. <Each target digit of the set value> 0 to 4: No attenuation term (operated as primary filter) 5 to 9: Secondary filter (Attenuation terms, ζ will be 1.0, 0.86, 0.71, 0.50, and 0.35 in order.) <Setting an example of this parameter> To set the command filter to ζ=1.0 and adjust filter 1 to ζ=0.71, the setting value should be 75 (first digit=5 (ζ=1.0), second digit=7 (ζ=0.71)). For the time constant of the command filter, Pr2.22 "Command smoothing filter" will be applied.
6	50	B	Viscous friction compensation gain	0 to 10000	0.1 %/ (10000r/ min)	Add the result of multiplying the command velocity by this setting value to the torque command as the correction amount of the viscous friction torque. • The encoder position deviation near the setting may be improved by setting the viscous friction factor estimation for Real-time auto tuning.

Two-degree-of-freedom control mode (with position control)

The mode of 2 degrees of freedom control is configured as shown in the block diagram below.

■ Two-degree-of-freedom control mode (with position control) block diagram

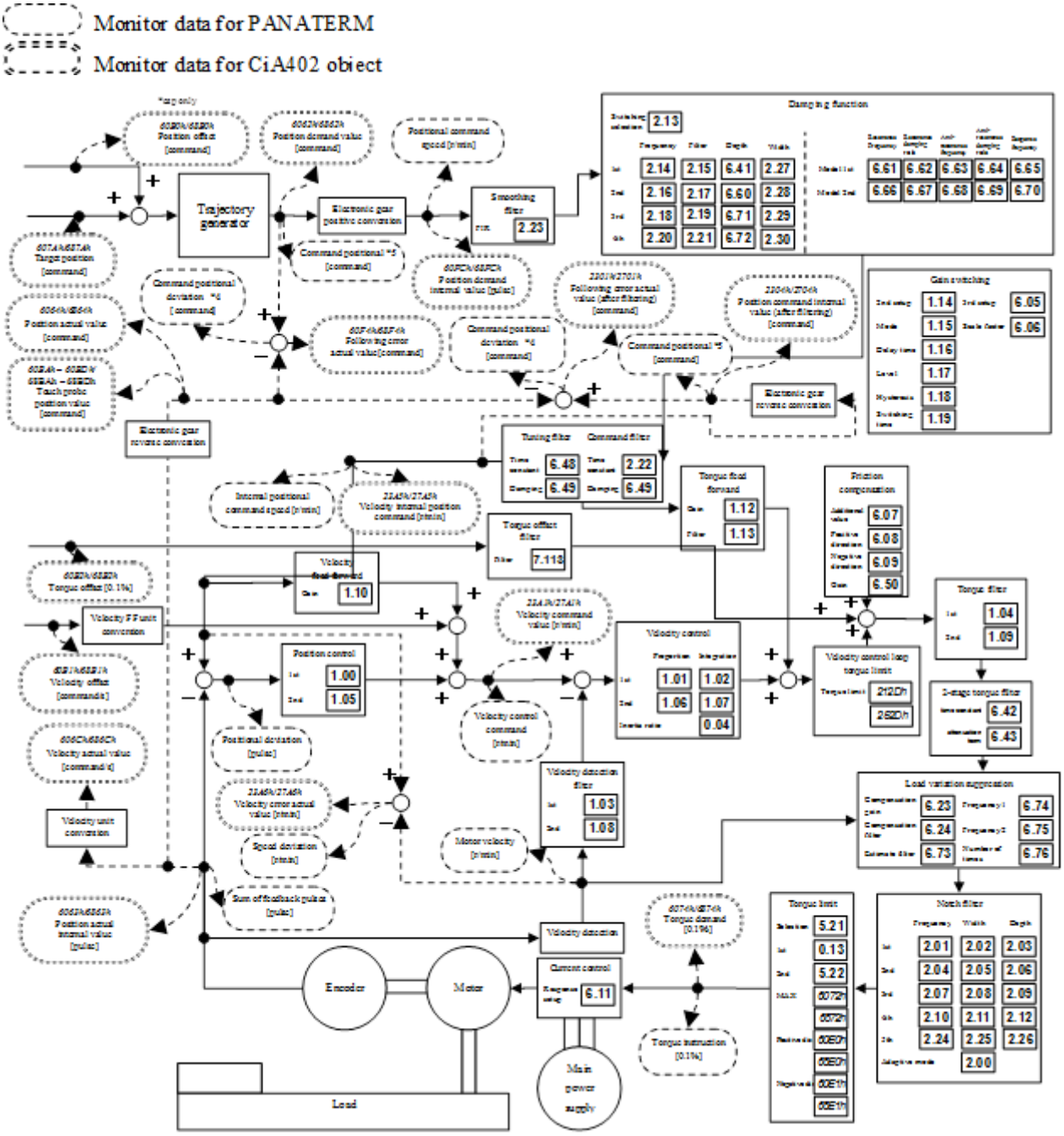

*1 A slanting number shows (ex: 607Ah) the object number of EtherCAT.

*2 A bold letter number shows (ex:1.00) a parameter number.

*3 Polarity was omitted.

*4 The method to calculate the positional deviation on PANATERM for Multi monitor screen (standard) varies depending on the setting of the command positional deviation output change (bit 14) of Pr7.23 (Communication function extended setup 2).

*5 The position command on PANATERM for Multi can be switched depending on the setting of bit3 (Command pulse accumulation value) of Pr7.99(Communication function extended setup 6).

*6 When performing test run function, Z phase search, Frequency characteristic measurement (position loop characteristic) from the PANATERM for Multi, the driver module switches to position control mode internally.

5.2.17 Two-degree-of-freedom control mode (with velocity control)

The two-degree-of-freedom control mode is an extended function of velocity control mode to improve the responsiveness by making it possible to independently set the command response and servo rigidity. Only the standard type of two-degree-of-freedom control is available.

Applicable range

This function is unable to be applied unless the following conditions are satisfied.

Conditions in which two-degree-of-freedom control mode is activated:

Control Mode	• Velocity control
Others	• Real-time auto tuning selection is two-degree-of-freedom control mode standard type. Note In the case of the Synchronization s type, Err88.1“Control mode setting error protection” occurs. • To be in the servo ON state. • Elements other than control parameters, such as torque limit, etc. are properly set and the motor is free of obstacle to normal motor rotation.

Relevant parameters

First of all, set Pr6.47 "Function expansion setup 2": bit0 to 1 and write in EEPROM; then, reset the control power supply to enable the two-degree-of-freedom control mode.

Thereafter, adjust the relevant parameters by Real-time auto tuning.

Refer to

See "5.1.3 Real-time auto tuning (Two-degree-of-freedom control mode standard type) "

Only when further improvement is required, manually finely adjust the following parameters while confirming responses.

■ **Relevant parameters**

Class	No.	Attribute	Title	Range	Unit	Function
6	47	R	Function expansion setup 2	-32768 to 32767	-	Various functions are set in bit units. bit0: two-degree-of-freedom mode 0: Invalid 1: Valid bit3: Selection of real-time auto-tuning of two-degree-of-freedom control 0: Standard type 1: Synchronization type Note The least significant bit is set to bit0.
2	22	B	Command smoothing filter	0 to 10000	0.1ms	At the time of the two-degree-of-freedom control, the time constant of command response filter is used. • The maximum value is restricted to 640 (=64.0 ms). • Making this parameter smaller can quicken the command response, whereas making it larger can slow the command response. Note The parameter value itself is not restricted but the applied value inside the driver module is restricted.
6	48	B	Adjust filter	0 to 2000	0.1ms	To set the time constant of adjustment filter. • When the torque filter setting is changed, set the adjustment filter to a near value while referring to setting of Real-time auto tuning. • At the time of speed control mode, the maximum value is restricted to 640 (=64.0 ms). Note The parameter value itself is not restricted but the applied value inside the driver module is restricted.

Block diagram of the two-degrees-of-freedom control mode (with velocity control)

Two-degree-of-freedom control mode (with velocity control) shall be as per the block diagram indicated below.

■ **Two-degree-of-freedom control mode (with velocity control) block diagram**

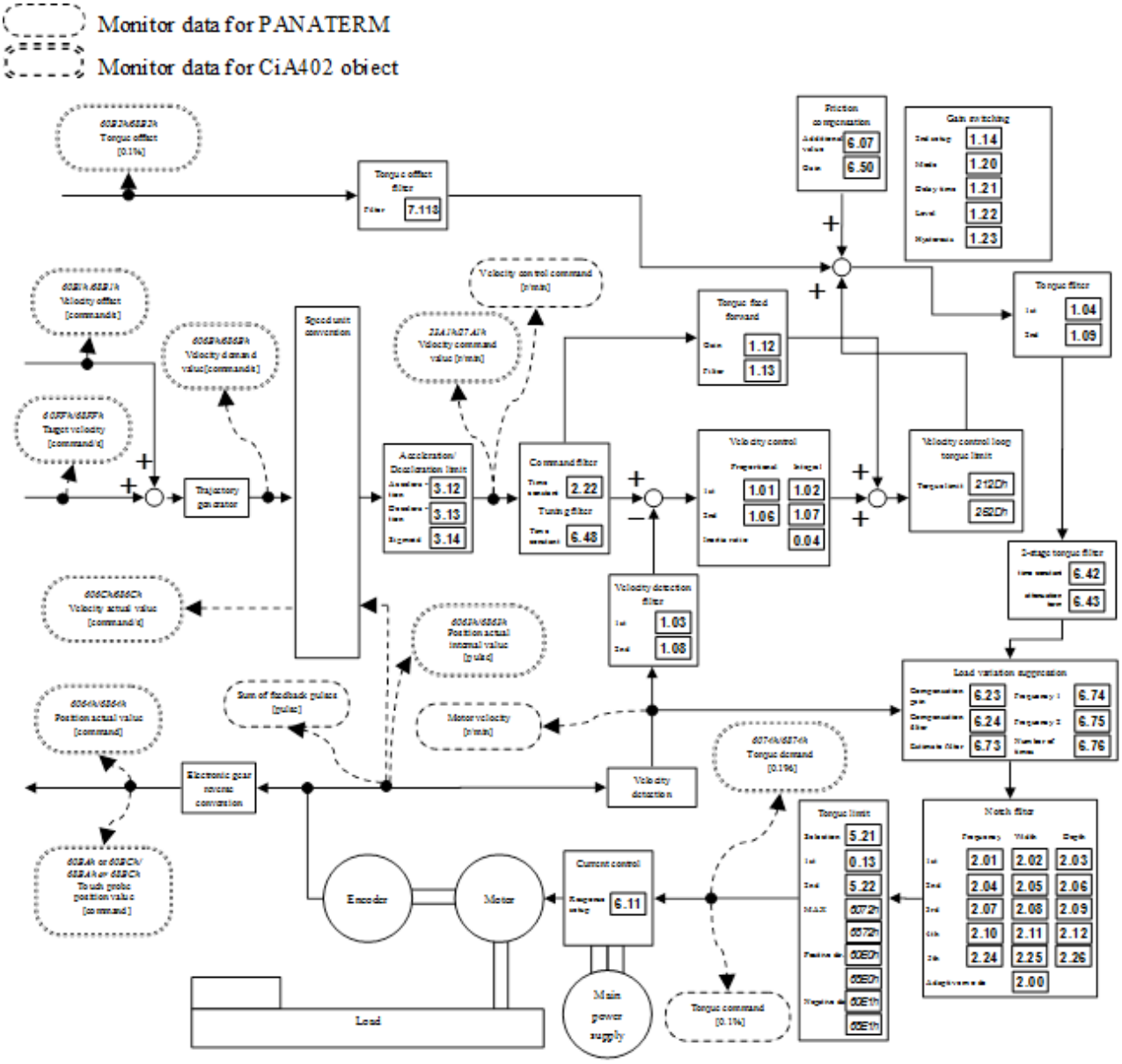

*1 A slanting number shows (ex: 607Ah) the object number of EtherCAT.

*2 A bold letter number shows (ex:1.00) a parameter number.

*3 Polarity was omitted.

*4 When performing Frequency characteristic measurement (speed close loop characteristic, Torque speed [Vertical]) from the PANATERM for Multi, the driver module switches to velocity control mode internally.

5.2.18 Two-degree-of-freedom control mode (with full-closed control)

The two degree-of-freedom control mode is an extended function of Full-closed control mode to improve the responsiveness by making it possible to independently set the command response and servo rigidity.

Only the standard type of two-degree -of-freedom control is available.

Applicable range

This function is unable to be applied unless the following conditions are satisfied.

Conditions in which two-degree-of-freedom control mode is activated:

Control Mode	• Full-closed control
Others	• Real-time auto tuning selection is two-degree-of-freedom control mode standard type. Note In the case of the Synchronization s type, Err88.1“Control mode setting error protection” occurs. • To be in the servo ON state. • Elements other than control parameters, such as torque limit, etc. are properly set and the motor is free of obstacle to normal motor rotation.

Relevant parameters

First of all, with Pr6.47 write "Function expansion setup 2" bit0 = 1 into EEPROM, and then, make the two degree-of-freedom control mode enabled by resetting the control power supply.

Thereafter, adjust by the real-time auto-tuning.

Refer to

See "5.1.3 Real-time auto tuning (Two-degree-of-freedom control mode standard type)"

Only when further improvement is required, finely adjust the following parameters manually while checking the responses.

■ **Relevant parameters**

Class	No.	Attribute	Title	Range	Unit	Function
6	47	R	Function expansion setup 2	-32768 to 32767	-	Set respective functions in unit of bit. bit0: two-degree-of-freedom control mode 0: Invalid 1: Valid bit3: Selection of real-time auto-tuning of two-degree-of-freedom control 0: Standard type 1: Synchronization type * The least significant bit is bit0. * bit3 (Selection of real-time auto-tuning of two-degree-of-freedom control) can be used only when bit0 is set to 1: Valid.
2	22	B	Command smoothing filter	0 to 10000	0.1 ms	Time constant for the command filter is set in two-degree-of-freedom control. • The maximum value is limited to 2000 (=200.0 ms). • Command response can be quickened by decreasing this parameter and slowed by increasing it. • The attenuation term is set by Pr6.49 “Adjust/Torque command attenuation term”. Note The parameter value itself is not limited, but the value applied in the driver moduleis limited.

(To be continued)

Class	No.	Attribute (Note 1)	Title	Range	Unit	Function
6	48	B	Adjust filter	0 to 2000	0.1 ms	Set the time constant for the adjust filter. • When the torque filter setting has been changed, set a value close to the real-time auto-tuning setting. • As a result of fine-tuning while checking the encoder position deviation near the setting, overshoot and oscillatory waveforms may be improved. • The attenuation term is set by Pr6.49 “Adjust/Torque command attenuation term”.
6	49	B	Command / tuning filter damping	0 to 99	-	Set the attenuation term for the command filter and adjust filter. • A decimal number indication is used. The first digit sets the command filter and the second digit sets the adjust filter. <Each target digit of the set value> 0 to 4: No attenuation term (operated as primary filter) 5 to 9: Secondary filter (Attenuation terms, ζ will be 1.0, 0.86, 0.71, 0.50, and 0.35 in order.) <Setting an example of this parameter> To set the command filter to ζ=1.0 and adjust filter 1 to ζ=0.71, the setting value should be 75 (first digit=5 (ζ=1.0), second digit=7 (ζ=0.71)). For the time constant of the command filter, Pr2.22 “Command smoothing filter” will be applied.
6	50	B	Viscous friction compensation gain	0 to 10000	0.1%/ (10000r/ min)	Add the result of multiplying the command velocity by this setting value to the torque command as the correction amount of the viscous friction torque. • The encoder position deviation near the setting may be improved by setting the viscous friction factor estimation for Real-time auto tuning.

Block diagram of the two-degrees-of-freedom control mode (with Full-closed control)

Two-degree-of-freedom control mode (with Full-closed control) shall be as per the block diagram indicated below.

■ **Two-degree-of-freedom control mode (with full-closed control) block diagram**

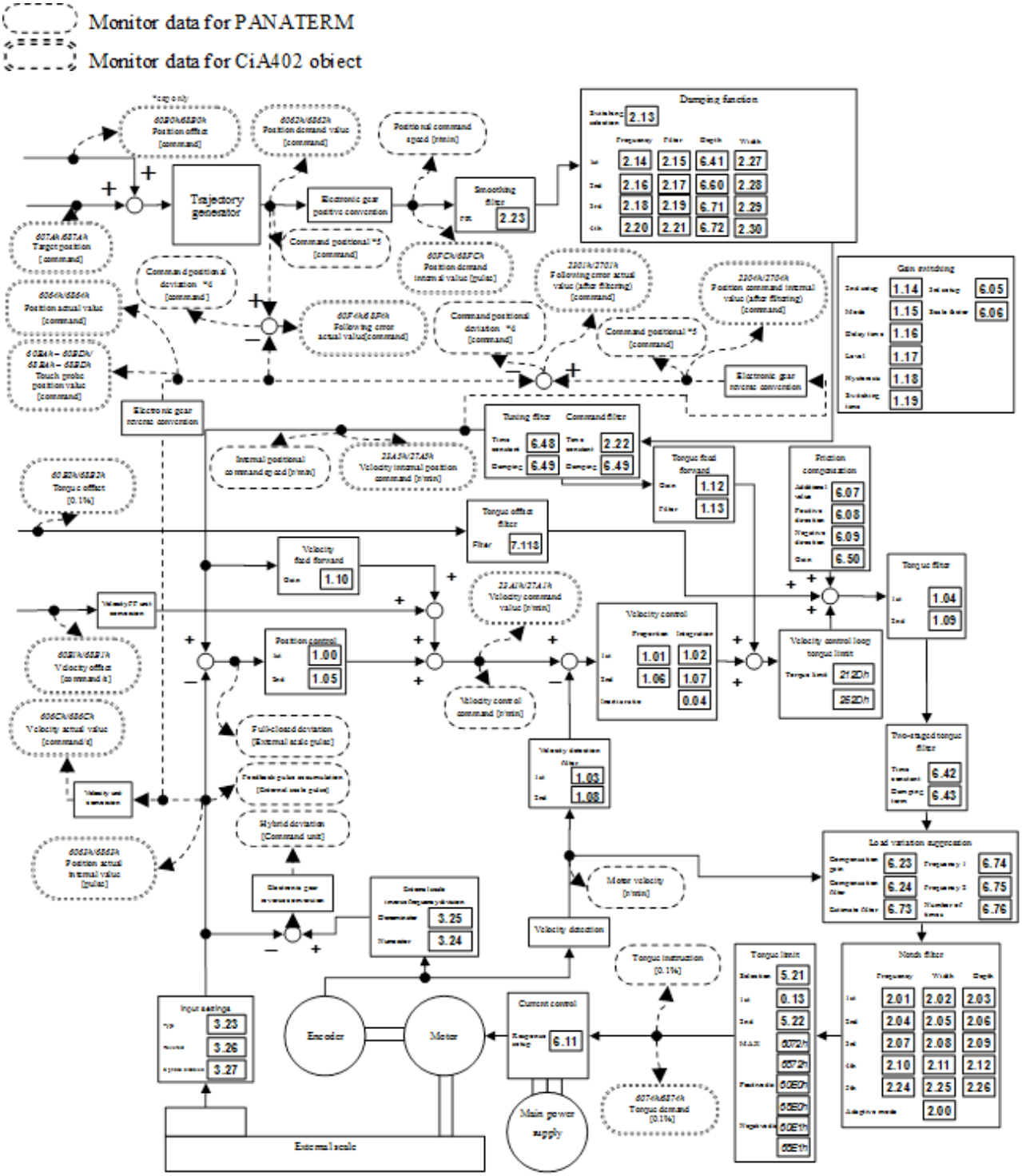

*1 A slanting number shows (ex: 607Ah) the object number of EtherCAT.

*2 A bold letter number shows (ex:1.00) a parameter number.

*3 Polarity was omitted.

*4 The method to calculate the positional deviation on PANATERM for Multi monitor screen (standard) varies depending on the setting of bit14 (command positional deviation output change) of Pr7.23 (Communication function extended setup 2).

*5 The position command on PANATERM for Multi can be swithched depending on the setting of the bit3 (Command pulse accumulation value) of Pr7.99 (Communication function extended setup 6).

5.2.19 Two-degree-of-freedom control mode (with torque control)

Torque control is the same regardless of whether the 2-DOF control mode is enabled or disabled.

Refer to

For details, refer to "TECHNICAL REFERENCE EtherCAT Communication Specification (SX-DSV03456)".

5.2.20 High response current control

High response current control is a function to improve the responsiveness of the current control part by changing Pr6.11 "Current response setup" to a value larger than the shipment value 100%.

Because it may be prone to generate vibration and noise, adjust to an appropriate value depending on the operating situation of an applicable unit just like the adjustment of the position control part/velocity control part.

Applicable range

This function works under the following condition.

Operating conditions for high response current control:

Control Mode	• Can be used in all control modes.
Others	• The software version shall be function extended version 2 or later. • Should be in servo-on condition • The elements other than control parameters such as torque limit settings are correctly set, assuring that the motor can run smoothly.

Relevant parameters

■ **Relevant parameters**

Class	No.	Attribute	Title	Range	Unit	Function
6	11	B	Current response setup	10 to 300	%	Adjust the current response with the level at shipment considered as 100 %. Setting this setting value at a value larger than 100 can improve current responsiveness.

Cautions

- When the value of Pr6.11 “Current response setting” is 99 or less, the current response can be lowered than the factory setting.
- The settable maximum value differs depending on the connected motor and the value is limited to 300% or lower (100% for some motors).

6

Application Functions

6.1 Torque limit switching function

It is a function which changes a torque limit value by the direction of operation.

Applicable range

This function can be applicable only when the following conditions are satisfied.

Conditions under which the Torque limit switching function is activated:

Control Mode	• Position control mode, Velocity control mode, Full-closed control mode and Torque control mode (Note 1)
Others	• Should be in servo-on condition • Parameters except for controls are correctly set, assuring that the motor can run smoothly.

(Note 1) Settings other than Pr5.21=5 will be disabled during torque control, and Pr0.13 “1st torque limit” becomes enabled.

Relevant parameters

■ Relevant parameters

Class	No.	Attribute	Title	Range	Unit	Function
0	13	B	1st torque limit	0 to 500	%	You can set up the 1st limit value of the motor output torque.
5	21	B	Selection of torque limit	0 to 5	-	You can set up the torque limiting method. Setup value / Negative direction / Positive direction 1: Pr0.13 2: Pr5.22 / Pr0.13 3: Pr0.13 4: Pr5.22 / Pr0.13 5: 60E1h/68E1h / 60E0h/68E0h * If 0 is set for this parameter, 1 is internally set. • Only the setting Pr5.21=5 becomes enabled during torque control. When Pr5.21=1 to 4, Pr0.13 is applied to the torque limit.
5	22	B	2nd torque limit	0 to 500	%	You can set up the 2nd limit value of the motor output torque.

Related object

Index	Sub Index	Name	Description	Units	Range	Data Type	Access	PDO	Op-mode	EEPROM
6072h /6872h	00h	Max torque	• Set the maximum torque. If the value exceeds the maximum torque of the motor is limited by the maximum torque of the motor. ▶ Note The maximum torque of the motor varies depending on the motor applied.	0.1%	0 to 65535	U16	rw	Yes	ALL	Yes

Torque command is limited at smaller one of 6072h and those effective for Pr0.13 and Pr5.22.

6.2 Motor working range setup function

If the motor with respect to the position command input range exceeds the motor operating range that is set by Pr5.14"Motor working range setup", it can be alarm stop at the Err34.0 "motor movable range set protection"

The allowable motor operating range is calculated internally by the driver module under the following formula:

- Positive direction allowable motor range = Positive direction position command input range + Pr5.14
- Negative direction allowable motor range = Negative direction position command input range - Pr5.14

In case the actual motor position for judgment exceeds this range, Err34.0 "motor movable range set protection" will be detected.

Applicable range

This function can be applicable only when the following conditions are satisfied.

Conditions under which the software limit works:

Control Mode	• Position control mode and Full-closed control mode.
Others	• Should be in servo-on condition. • Parameters except for controls such as torque limit setup, are correctly set, assuring that the motor can run smoothly.

Cautions

- This function is not a protection against the abnormal position command.
- When this software limit protection is activated, the motor decelerates and stops according to 605Eh/685Eh (Fault reaction option code).The work (load) may collide to the machine end and be damaged depending on the load during this deceleration, hence set up the range of Pr 5.14 including the deceleration movement.
- When changing the control mode (for the purpose of only to control velocity or torque), do not use this function. Instead, use software limit function or drive inhibit input.
- When any of the following values ([encoder pulse] or [external scale pulse]) managed internally in the driver module, exceeds -2^{31} to $2^{31}-1$, Err34.0 "motor movable range set protection" detection process will be invalidated'. (Note)
  - Position command input range
  - Actual motor position for judgment
  - Motor movable range
- In case any of the following conditions are satisfied, the position command input range and the actual motor position for judgment managed inside the driver module will be cleared and Err34.0 "Motor movable range setting error protection" detection process will be invalidated.
  - When the control power is turned on
  - Servo-OFF state
  - Velocity control state or torque control state
  - During frequency response measurement using setup support software (PANATERM for Multi).
  - During the time position deviation is cleared (When an EMS state transitions from Init to PreOP, decelerated stop from alarm, etc.).
  - When position information is initialized.When absolute clear by Setup support software (PANATERM for Multi) etc.
  - Pr5.14 = 0
  - In Full-closed control mode,when Pr5.14 satisfies the following formula (when the value of Pr5.14 converted into external pulse units exceeds $2^{31}-1$). (Note)
    Pr5.14 > $((2^{31} -1)$ * Pr3.24 * 10) / (Encoder resolution * Pr3.25)
  - When clearing position deviation during deceleration to stop due to over-travel inhibit input
  - When returning to home

(Note) However, when Err34.0 detection processing is invalid, Err34.0 can be generated by setting the following setting to valid.
Pr6.97 “Function expansion setup 3”
bit2 Expansion of Allowable motor operating range abnormal protection 0: Invalid, 1: Valid

Relevant parameters

■ Relevant parameters

Class	No.	Attribute	Title	Range	Unit	Function
5	14	A	Motor working range setup	0 to 1000	0.1 revolution	You can set up the movable range of the motor against the position command input range. When the motor movement exceeds the setup value, software limit protection will be triggered. When set value of this parameter is 0, Err34.0 become disable. Also in condisions written in above "Cautions", Err34.0 become disable.
6	97	B	Function expansion setup 3	-2147483648 to 2147483647	-	Sets various function in bit units: bit 2: Expansion of Allowable motor operating range abnormal protection. 0: Invalid 1: Valid

Operation example

■ When no position command is entered (Servo-ON status)

The motor movable range will be the travel range which is set at both sides of the motor with Pr5.14 since no position command is entered. When the load enters to the Err34.0 occurrence range (oblique line range), software limit protection will be activated.

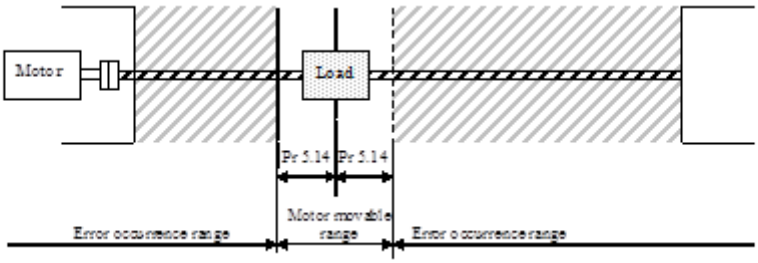

■ When the load moves to the right (at Servo-ON)

When the position command to the right direction is entered, the motor movable range will be expanded by entered position command, and the movable range will be the position command input range + Pr5.14 setups in both sides.

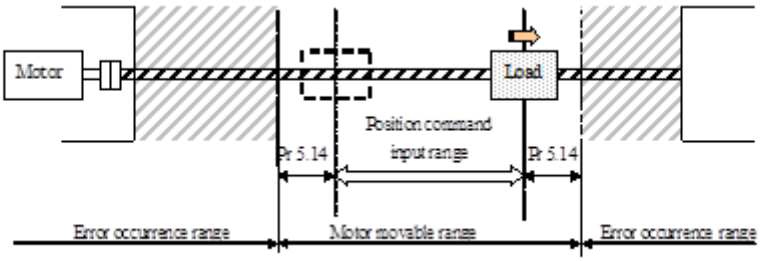

■ When the load moves to the left (at Servo-ON)

When the position command to the left direction, the position command input range will be expanded further.

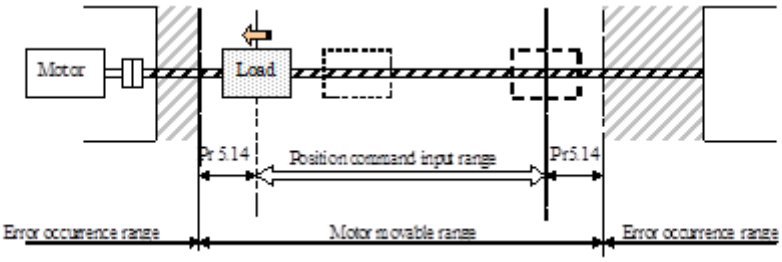

6.3 Deceleration stop sequence

- Sets how to decelerate and stop the motor if main power is shut down or an alarm occurs while PDS is Operation enabled state (servo-on state).
- Combine the deceleration function (option code) defined by CoE(CiA402) and the deceleration function on the servo (MINAS A6) side (dynamic brake stop, free-run stop, emergency stop).

Refer to

Please refer to "TECHNICAL REFERENCE EtherCAT Communication Specification (SX-DSV03456)" for details.

6.3.1 Sequence upon inputting of over-travel inhibition (POT, NOT)

Set up the operating sequence when the over-travel inhibition is input (POT, NOT).

In hm mode, there are following 2 modes: the mode for performing the reverse motion after stopping in accordance with the Method that is specified and the mode in which the edge of POT/NOT is set as the home position.

Refer to

For details, refer to "TECHNICAL REFERENCE EtherCAT Communication Specification (SX-DSV03456)".

NOTE

- **Set the over-travel inhibition input (POT, NOT) correctly. If it is set incorrectly (NOT for the drive side in the positive direction, POT for the drive side in the negative direction, etc.), operations cannot be guaranteed.**

Relevant parameters

■ Relevant parameters

Class	No.	Attribute	Title	Range	Unit	Function
5	04 (Note 1)	C	Over-travel inhibit input setup	0 to 3	-	Set up the operation of the run-inhibition (POT, NOT) inputs. Normally it should be set to 1. 0: Deceleration stop on servo (MINAS A6) side (sequence at time of run-inhibition input) POT -> positive direction drive inhibit, NOT -> negative direction drive inhibit. When POT is input during positive direction driving, stops the drive according to Pr5.05 Sequence at over-travel inhibit. The similar function NOT is applied in reverse direction. 1: CoE (CiA402) side deceleration stop (Note 1) POT -> positive direction drive inhibit, NOT -> negative direction drive inhibit. When POT is input during positive direction driving or NOT is input during negative direction driving,EtherCAT profile slowdown defined in CoE(CiA402) works and stops it. The constants at the time of a slowdown differ for every control mode. 2: Deceleration stop on servo (MINAS A6) side (Sequence at alarm) POT or NOT input activates Err 38.0 Run-inhibition input protection. 3: Reserved for manufacturer's use (do not set this)
5	05 (Note 1)	C	Sequence at over-travel inhibit	0 to 2	-	When Pr5.04 Over-travel inhibition = 0, specify the status during deceleration and stop after application of the over-travel inhibition (POT, NOT).
5	11	B	Torque setup for emergency stop	0 to 500	%	Set up the torque limit at emergency stop. When setup value is 0, the torque limit for normal operation is applied.

(Note 1) With POT of Axis A allocated to SI6 or NOT of Axis A allocated to SI7, or with POT of Axis B allocated to SI2 or NOT of AxisB allocated to SI3, and Pr 5.04 "Over-travel inhibit input setup" is set to other than 1 (CoE side deceleration stop), Err38.2 "Over-travel inhibit input protection 3" occurs.

■ Contents

■ Detail of deceleration stop on servo (MINAS A6) side (Pr5.04 = 0)

Pr 5.04 (Note 4)	Pr 5.05	During deceleration (Note 5)		After stalling (Approx. 30 r/min or below)	
		Stopping method	Deviation	Operation after stopping	Deviation
0	Common	• Forcibly controls the position. (Note 1) • Forcibly stops position command generation. (Note 1) • bit 11(Internal limit active) of 6041h/6841h (Statusword) is ON.	-	• Control mode depends on the command. (Note 2) • bit 11(Internal limit active) of 6041h/6841h (Statusword) is ON.	-
	0	• Dynamic brake (DB) (Note 6)	Clear (Note 3)	• Torque command=0 towards inhibited direction	Hold
	1	• Free run (DB OFF)	Clear (Note 3)	• Torque command=0 towards inhibited direction	Hold
	2	• Emergency stop (Note 4) (Note 7) • Torque limit=Pr 5.11	Clear (Note 3)	• Torque limit and torque command are as usual.	Hold

(Note 1) During deceleration, the system is forced to perform position control, forcibly stopping the internal position command generating process.

(Note 2) Stop a command in over-travel inhibit direction with the over-travel inhibit input set to ON. If a command is issued in over-travel inhibit direction, the command is neglected.

(Note 3) During deviation clearing, the process that lets the internal command position to follow the feedback position is activated. At the instantaneous stopping and at the end of deceleration, position deviations/external scale deviations accumulated during deceleration are cleared.

(Note 4) Emergency stop refers to a controlled immediate stop with servo-on. The torque command value is limited during this process by Pr 5.11 Emergency stop torque setup. In an emergency stop, normal operation is performed during the time between the input of the signal and the start of the emergency stop. If a command is stopped concurrently with the input of the signal, a torque disallowed by normal torque limitation may be output. To allow a stop with the torque specified in the Emergency stop torque setup, continue to send the normal command at least 4 ms after the input of the signal.

(Note 5) Deceleration period is the time required for the running motor to speed down to 30 r/min. Once the motor speed drops below 30 r/min, it is treated as in stop state regardless of its speed.

(Note 6) Stopping method is Free run (DB OFF) in dynamic brake non-compatible models.

(Note 7) Pr6.14 "Emergency stop time at alarm" setting is invalid.

■ Detail of deceleration stop on CoE (CiA402) side (Pr5.04 = 1)

Pr 5.04	Control mode	During deceleration (Note 2)	After stalling (Approx. 30 r/min or below)
		Stopping method	Operation after stopping
1	Common	• Hold a servo-on condition. • Bit 11(Internal limit active) of 6041h/6841h (Statusword) is ON.	• Hold a servo-on condition. • Bit 11(Internal limit active) of 6041h/6841h (Statusword) is ON.
	pp, pv, ip, csp, csv	Deceleration stop in 6085h/6885h (quick stop deceleration).	• No command acceptance towards inhibited direction (Note 1)
	tq,cst	Deceleration stop in 6087h/6887h (Torque slope).	

(Note 1) When the drive inhibit input of the ON state can stop a command to towards inhibited direction. If you give a command in the towards inhibited direction, the command will be ignored.

(Note 2) Deceleration period is the time required for the running motor to speed down to 30 r/min. Once the motor speed drops below 30 r/min, it is treated as in stop state regardless of its speed.

■ In case of deceleration stop on servo (MINAS A6) side (sequence at time of alarm) (Pr5.04 = 2)

Err38.0 "Over-travel inhibit input protection" occurs when POT or NOT is turned ON.
Therefore, the system operates according to Sequence at alarm, but not to this setting.

6.3.2 Sequence at servo-off

- Operation sequence of the servo-off state is set by 605Ah/685Ah (Quick stop option code), 605Bh/685Bh (Shutdown option code) and 605Ch/685Ch (Disable operation option code).
- Deceleration function on the servo (MINAS A6) side is activated when these objects is zero. Deceleration function on the CoE (CiA402) side is activated when these objects is non-zero.
- This section explains deceleration function on the servo (MINAS A6) side.

  Refer to

  Please refer to "TECHNICAL REFERENCE EtherCAT Communication Specification (SX-DSV03456)" for details of deceleration function on the CoE (CiA402) side.

Relevant parameters

■ **Relevant parameters**

Class	No.	Attribute	Title	Range	Unit	Function
5	06	B	Sequence at Servo-Off	0 to 9	-	Specify the status during deceleration and after stop, after servo-off.
5	11	B	Torque setup for emergency stop	0 to 500	%	Set up the torque limit at emergency stop. When setup value is 0, the torque limit for normal operation is applied.

Contents

- Details of Pr 5.06 (Sequence at Servo-Off)

Pr 5.06	During deceleration (Note 4)		After stalling (Approx. 30 r/min or below)	
	Stopping method	Deviation	Operation after stopping	Deviation
Common	• Forcibly controls the position. (Note 1) • Forcibly stops position command generation. (Note 1)	-	• Forcibly controls the position. (Note 1) • Forcibly stops position command generation. (Note 1)	-
0, 4	• Dynamic brake (DB) (Note 6)	Clear (Note 2)	• Dynamic brake (DB) (Note 6)	Clear (Note 2)
1, 5	• Free run (DB OFF)	Clear (Note 2)	• Dynamic brake (DB) (Note 6)	Clear (Note 2)
2, 6	• Dynamic brake (DB) (Note 6)	Clear (Note 2)	• Free run (DB OFF)	Clear (Note 2)
3, 7	• Free run (DB OFF)	Clear (Note 2)	• Free run (DB OFF)	Clear (Note 2)
8	• Emergency stop (Note 3) (Note 5) (Note 7) • Torque limit =Pr 5.11	Clear (Note 2)	• Dynamic brake (DB) (Note 6)	Clear (Note 2)
9	• Emergency stop (Note 3) (Note 5) (Note 7) • Torque limit =Pr 5.11	Clear (Note 2)	• Free run (DB OFF)	Clear (Note 2)

(Note 1) During deceleration sequence or at the stop (servo OFF), the system has to control the position and to stop the generation of internal position command.

(Note 2) During deviation clearing process, the system causes the internal command position to follow up the feedback position. When executing the interpolation feed system command after servo ON, re-set the command coordinate of the host controller. The motor may operate sharply.

(Note 3) Emergency stop refers to a controlled immediate stop with servo-on. The torque command value is limited during this process by Pr 5.11 Emergency stop torque setup. In an emergency stop, since normal operation is performed during the time between the servo OFF command and the start of the emergency stop, a torque disallowed by normal torque limitation may be output. To allow a stop with the torque specified in the Emergency stop torque setup, continue to send the normal command at least 4 ms after the input of the servo OFF command.

(Note 4) Deceleration period is the time required for the running motor to speed down to 30 r/min. Once the motor speed drops below 30 r/min, it is treated as in stop state regardless of its speed.

(Note 5) After emergency stop start, please continue to send Servo off command (PDS command "Disable operation", "Shutdown", "Disable voltage", "Quick Stop") until the motor is stopped.

(Note 6) Stopping method is Free run (DB OFF) in dynamic brake non-compatible models.

(Note 7) Pr6.14 "Emergency stop time at alarm" setting is invalid.

6.3.3 Sequence at main power OFF

- The operation sequence at the main power supply OFF is changed with combination, such as 6007h/6807h (Abort connection option code), Pr5.07 (main power off sequence), and PSM Pr.02 (main power off detection time).
- Basically, the deceleration function defined by CoE (CiA402) is valid until the deceleration function defined by servo (MINAS-A6) side is activated by detecting the main power supply OFF (between L1, L2, and L3) of the power supply module.
  - When "No action" is set by 6007h/6807h = 0, the CoE (CiA402) deceleration function does not operate, and the deceleration function on the servo (MINAS A6) side operates.
  - When the main power DC-bus voltage decreases, Err13.0 (Main power undervoltage protection [PN]) occurs with the highest priority, causing the operation in accordance with Pr5.10 (Sequence at alarm).
- This section explains deceleration function on the servo (MINAS A6) side.

Refer to

Please refer to "TECHNICAL REFERENCE EtherCAT Communication Specification (SX-DSV03456)" for details of deceleration function on the CoE (CiA402) side.

Relevant parameters

■ **Relevant parameters**

Class	No.	Attribute	Title	Range	Unit	Function
5	07	B	Sequence at main power OFF	0 to 9	-	Specify the status during deceleration after main power interrupt or after stoppage.
5	08	B	L/V trip selection upon main power off	0 to 3	-	Select LV trip or servo OFF upon occurrence of main AC power alarm. Setup the condition to detect main AC power OFF alarm when the main AC power is kept interrupted for a time longer than the time set by PSM Pr.02. bit0: 0: The servo off according to the setting of 6007h/6807h (Abort connection option code) or Pr5.07. 1: Trip with Err 13.1 Main power undervoltage protection. (Note 1) bit1: 0: Detect main AC power OFF alarm only when servo is in ON state. 1: Always detect main AC power OFF alarm.
5	09	C S	Detection time of main power off	20 to 2000 (Note 2)	ms	Set up main AC power alarm detection time. Main AC power OFF detection is disabled when the setting value is 2000.
5	11	B	Torque setup for emergency stop	0 to 500	%	Set up the torque limit at emergency stop. When setup value is 0, the torque limit for normal operation is applied.
6	36	R	Dynamic brake operation input setup	0 to 1	-	Sets between enabling and disabling dynamic brake (DB) operation input by I/O. Note This function is available only when the main power is turned off. 0:Disabled 1:Enabled

PSM Pr.	Name	Setting range	Shipping setting	Unit	Content
02	Main power off detection time	0 to 2000	70	ms	Sets up the main power off detection time. Main power off is not detected if the setting value is set smaller than 20 or is set to 2000. (Note 1)

(Note 1) To use this setting with a smaller value than the shipment value, please check matching with your power supply environment.

Contents

■ Details of Pr 5.07 (Sequence at main power OFF)

Pr 5.07	During deceleration (Note 4)		After stalling (Approx. 30 r/min or below)		
	Stopping method	Deviation	Operation after stopping		Deviation
			Pr6.36 = 0	Pr6.36 = 1	
Common	• Forcibly controls the position. (Note 1) • Forcibly stops position command generation. (Note 1)	-	• Forcibly controls the position. (Note 1) • Forcibly stops position command generation. (Note 1)		-
0, 4	• Dynamic brake (DB) (Note 5)	Clear (Note 2)	• Dynamic brake (DB) (Note 5)	Operation of dynamic brake is subjected to the state of dynamic brake switching input (DB-SEL). (Note 6)	Clear (Note 2)
1, 5	• Free run (DB OFF)	Clear (Note 2)	• Dynamic brake (DB) (Note 5)		Clear (Note 2)
2, 6	• Dynamic brake (DB) (Note 5)	Clear (Note 2)	• Free run (DB OFF)		Clear (Note 2)
3, 7	• Free run (DB OFF)	Clear (Note 2)	• Free run (DB OFF)		Clear (Note 2)
8	• Emergency stop (Note 3) (Note 7) • Torque limit =Pr 5.11	Clear (Note 2)	• Dynamic brake (DB) (Note 5)		Clear (Note 2)
9	• Emergency stop (Note 3) (Note 7) • Torque limit =Pr 5.11	Clear (Note 2)	• Free run (DB OFF)		Clear (Note 2)

(Note 1) During deceleration sequence or at the stop (main power OFF), the system must control the position and stop the generation of internal position command.

(Note 2) During deviation clearing process, the system causes the internal command position to follow up the feedback position. When executing the interpolation feed system command after servo ON, re-set the command coordinate of the host controller. The motor may operate sharply.

(Note 3) Emergency stop refers to a controlled immediate stop with servo-on. The torque command value is limited during this process by Pr 5.11 Emergency stop torque setup. If a command is stopped concurrently with a power OFF detection, a torque disallowed by normal torque limitation may be output. To allow a stop with the torque specified in the Emergency stop torque setup, continue to send the normal command at least 4 ms after the power OFF detection.

(Note 4) Deceleration period is the time required for the running motor to speed down to 30 r/min.
Once the motor speed drops below 30r/min, it is treated as in stop state regardless of its speed.

(Note 5) Stopping method is Free run (DB OFF) in dynamic brake non-compatible models.

(Note 6) Dynamic brake operation input will be possible when Pr6.36 "Dynamic brake operation input setup" is effective d when main power supply is OFF. In the output signal assignment of Pr4.02 "SI3 input selection," when connected to COM- by a connection setting, dynamic brake installed inside the driver module will be released, and when COM- is opened, the dynamic brake installed inside the driver module will activate.
This input will become invalid for Servo-ON, during trips, safety state or when the main power supply is switched ON and will follow the normal sequence setting.

(Note 7) Pr6.14 "Emergency stop time at alarm" setting is invalid.

6.3.4 Sequence at alarm

- Set the operation sequence at the alarm with the exception of the communication related alarm (Err80.*, Err81.*, Err85.*, Err88.*).
- Communication related alarms (Err80.*, Err81.*, Err85.*, Err88.*) information, set by 605Eh/685Eh (Fault reaction option code).

Refer to

Please refer to "TECHNICAL REFERENCE EtherCAT Communication Specification (SX-DSV03456)" for details.

Relevant parameters

■ Relevant parameters

Class	No.	Attribute	Title	Range	Unit	Function
5	10	B	Sequence at alarm	0 to 7	-	Specify the status during deceleration and after stop, after occurrence of alarm.

Contents

■ Details of Pr 5.10 (Sequence at alarm)

Pr 5.10	During deceleration (Note 4)			After stalling (Approx. 30 r/min or below)	
	Stopping method		Deviation	Operation after stopping	Deviation
Common	• Forcibly controls the position. (Note 1) • Forcibly stops position command generation. (Note 1)		-	• Forcibly controls the position. (Note 1) • Forcibly stops position command generation. (Note 1)	-
0	• Dynamic brake (DB) (Note 6)		Clear (Note 2)	• Dynamic brake (DB) (Note 6)	Clear (Note 2)
1	• Free run (DB OFF)		Clear (Note 2)	• Dynamic brake (DB) (Note 6)	Clear (Note 2)
2	• Dynamic brake (DB) (Note 6)		Clear (Note 2)	• Free run (DB OFF)	Clear (Note 2)
3	• Free run (DB OFF)		Clear (Note 2)	• Free run (DB OFF)	Clear (Note 2)
4	Action A (Note3)	• Emergency stop (Note 3) (Note 5) • Torque limit =Pr 5.11	Clear (Note 2)	• Dynamic brake (DB) (Note 6)	Clear (Note 2)
	Action B (Note3)	• Dynamic brake (DB) (Note 6)	Clear (Note 2)		
5	Action A (Note3)	• Emergency stop (Note 3) (Note 5) • Torque limit =Pr 5.11	Clear (Note 2)	• Dynamic brake (DB) (Note 6)	Clear (Note 2)
	Action B (Note3)	• Free run (DB OFF)	Clear (Note 2)		
6	Action A (Note3)	• Emergency stop (Note 3) (Note 5) • Torque limit =Pr 5.11	Clear (Note 2)	• Free run (DB OFF)	Clear (Note 2)
	Action B (Note3)	• Dynamic brake (DB) (Note 6)	Clear (Note 2)		
7	Action A (Note3)	• Emergency stop (Note 3) (Note 5) • Torque limit =Pr 5.11	Clear (Note 2)	• Free run (DB OFF)	Clear (Note 2)
	Action B (Note3)	• Free run (DB OFF)	Clear (Note 2)		

(Note 1) During deceleration sequence or at the stop (during alarm or servo OFF), the system must control the position and stop the generation of internal position command.

(Note 2) During deviation clearing process, the system causes the internal command position to follow up the feedback position. When executing the interpolation feed system command after servo ON, first re-set the command coordinate of the host controller. The motor may operate sharply..

(To be continued)

(Note 3) Action of A/B: When an alarm requiring emergency stop occurs, the action A is selected when the setup value in the table is set within the range 4 to 7, causing emergency stop of operation. When an alarm not requiring emergency stop occurs, it triggers dynamic braking (DB) specified by action B, or free-running. (Refer to Section "6.3.5 Emergency stop upon occurrence of alarm") Hold the main circuit power until deceleration stop is completed.
For the alarm requiring emergency stop, refer to Section "7.1 List of protective function".

(Note 4) Deceleration period is the time required for the running motor to speed down to 30 r/min. Once the motor speed drops below 30 r/min, and changes its status after stoppage, it is treated as in stop state regardless of its speed.

(Note 5) Action B is performed when an alarm requiring emergency stop occurs while performing the dynamic braking (DB) operation with drive inhibition input sequence, sequence at the time of servo OFF or sequence at main power OFF or free-running.

(Note 6) Stopping method is Free run (DB OFF) in dynamic brake non-compatible models.

6.3.5 Emergency stop upon occurrence of alarm

When an alarm requiring emergency stop occurs, the system controls and immediately stops the motor.

Relevant parameters

■ **Relevant parameters**

Class	No.	Attribute	Title	Range	Unit	Function
5	10	B	Sequence at alarm	0 to 7	-	Specify the status during deceleration and after stop, after occurrence of alarm. Setting the parameter to one of 4 to 7, enables emergency stop.
5	11	B	Torque setup for emergency stop	0 to 500	%	Set up the torque limit at emergency stop.When setup value is 0, the torque limit for normal operation is applied
5	13	B	Over-speed level setup	0 to 20000	r/min	Set up the detection level of Err.26.0 Over-speed protection.If the motor speed exceeds this setup value, Err26.0 “Over-speed Protection” occurs.When the setting value is 0, the over-speed level becomes the over-speed protection level.The internal value is limited to the over-speed level of applicable motor. (Note 1)
6	14	B	Emergency stop time at alarm	0 to 1000	ms	Set up the time allowed to complete emergency stop in an alarm condition. Exceeding this time puts the system in alarm state. When setup value is 0, emergency stop is disabled and the immediate alarm stop is enabled.
6	15	B	2nd over-speed level setup	0 to 20000	r/min	Set up the detection level of Err.26.1 2nd over-speed protection. If the motor speed exceeds this setup value, Err26.1 “2nd over-speed protection” occurs. When the setting value is 0, the over-speed level becomes the over-speed protection level. The internal value is limited to the over-speed level of applicable motor. (Note 1)

(Note 1) Except some motors.

Contents

- Emergency stop sequence upon occurrence of the alarm requiring emergency stop.

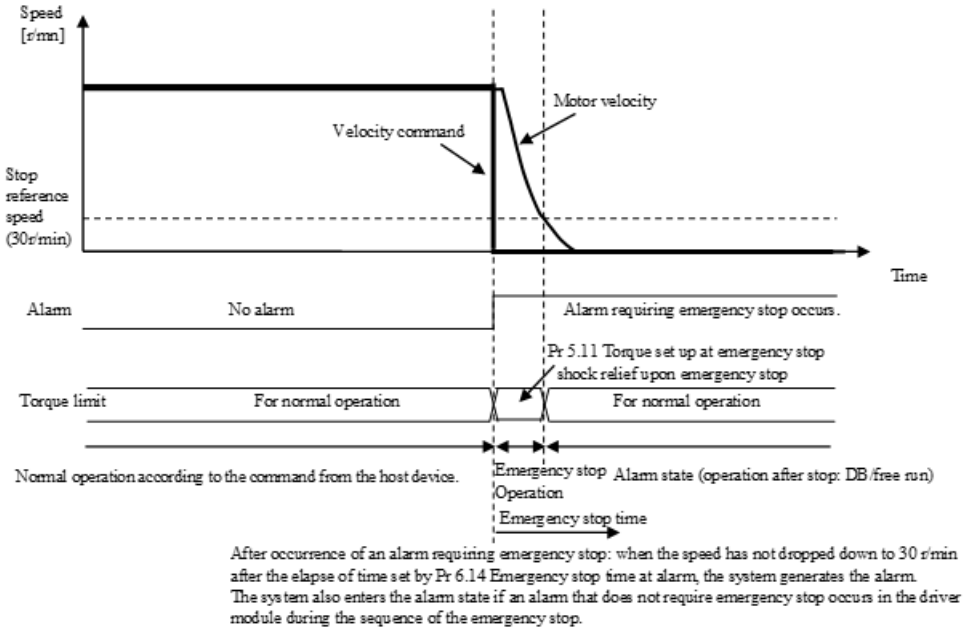

- When an alarm requiring emergency stop occurs, normal operation (the normal torque limit is enabled) continues until an emergency stop is started. Therefore, if the command is interrupted during this period, the torque controlled with the normal torque limit may be output.
  To stop operation with the emergency stop torque limit when an alarm requiring emergency stop occurs, continue to send the normal position command for at least 4 ms from the alarm notification.

  <Bad example>
  Turning on Forced alarm input (E-STOP) and stopping command at the same time

- Setting of Pr5.13 "Over-speed level setup" and Pr6.15 "2nd over-speed level"
  The motor may not stop normally even if the emergency stop function is used.

  For example, when the motor velocity exceeds Pr5.13 "Over-speed level setup" as shown in the figure below, the motor velocity may increase if normal control cannot be accomplished even after the start of emergency stop operation.

  As a safety measure in case of this case, Err26.1 "2nd over-speed protection" is provided.

  As Err26.1 is an alarm that does not require emergency stop, energization to the motor is shut off and the motor is stopped according to sequence at alarm, operation B. Set an allowable over-speed level for Pr6.15 "2nd over-speed level setup".

  In addition, set Pr5.13 to a small value with a sufficient margin for Pr6.15. If the margin is insufficient or the set value is the same, both Err26.0 and Err26.1 may be detected. In this case, Err26.0 will be displayed. However, because Err26.1 is also activated internally, priority is given to the alarm that does not require emergency stop, and emergency stop is not executed.

  Furthermore, if the Pr6.15 setting is smaller than the Pr5.13 setting, Err26.1 occurs prior to Err26.0. Thus, emergency stop is not executed.

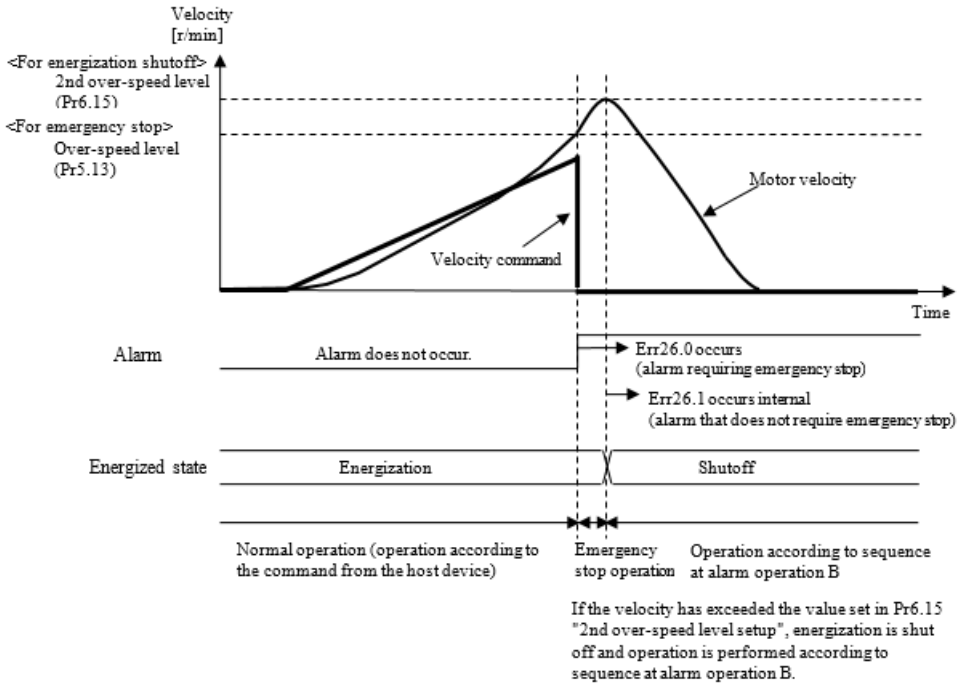

6.3.6 Fall prevention function in the event of alarms/servo-ON

6.3.6.1 Fall prevention function in the event of alarms

- If the alarm requiring emergency stop has occurred, falling of the robot arm is prevented by maintaining the energization to the motor until the external brake is actually operated after the brake release output (BRK-OFF) is turned OFF.
- This function can prevent a fall when alarm occurs by setting the sequence at alarm to emergency stop. This function cannot be used for alarm that does not support emergency stop.

Refer to

- For details of Sequence at alarm, refer to Section "6.3.4 Sequence at alarm" and "6.3.5 Emergency stop upon occurrence of alarm".
  For details of the alarm that supports emergency stop, refer to Section "7.1 List of protective function".
- To release the brake from the I/O connector, refer to "2.4 I/O signal allocation function".
  To release the brake from the exclusive output for holding brake, refer to "2.5 Mechanical brake output".

Relevant parameters

■ **Relevant parameters**

Class	No.	Attribute	Title	Range	Unit	Function
5	10	B	Sequence at alarm	0 to 7	-	Specify the status during deceleration and after stop, after occurrence of alarm. Setting the parameter to one of 4 to 7, enables emergency stop.
6	10	B	Function expansion setup	-32768 to 32767	-	Set the bit related to the fall prevention function. bit10: Fall prevention function in case of alarms 0: Invalid 1: Valid To enable the fall prevention function, normally set this parameter to 1. Note The least significant bit is bit0.
6	51	B	Wait time for emergency stop	0 to 10000	ms	Set the time to maintain the motor energization after the brake release output (BRK-OFF) is turned OFF in the event of an alarm requiring emergency stop. When the set value is 0, the fall prevention function is disabled. Note This parameter is enabled even when Pr6.10 "Function expansion setup" is not set to bit10=1. To enable the fall prevention function, however, be sure to set Pr6.10 "Function expansion setup" to bit10=1.

Contents

Operation of the fall prevention function in the event of the alarm requiring emergency stop

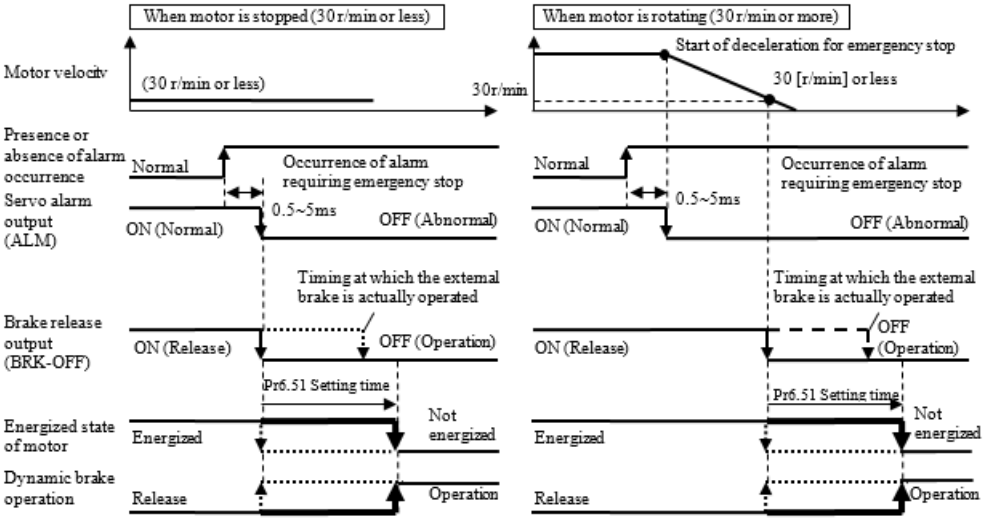

6.3.6.2 Fall prevention function in the event of servo-ON

By using object 60B2h / 68B2h (Torque offset), the offset value is input to the torque filter when the servo is turned off, eliminating the delay in rising the torque command at the servo-on command input timing and preventing the device from falling.

Relevant parameters

■ **Relevant parameters**

Class	No.	Attribute	Title	Range	Unit	Function
7	24	C	Function expansion setup	-32768 to 32767	-	bit7: Internal value state selection of objects 60B2h/68B2h (Torque offset) in servo-off(Fall prevention function in the event of Servo-ON) 0:Clear 1:Updated with the set value of 60B2h/68B2h ▶ Note When this setting value is set to 1, set the value of 60B2h/68B2h (Torque offset) to a value smaller than the value of Pr5.11 “Torque offset at immediate stop”

Related object

Index	Sub Index	Name	Description	Units	Range	Data Type	Access	PDO	Op-mode	EEPROM
2107h -72h /2507h -72h	00h	Torque offset filter	• Set the time constant of primary delay filter for Torque offset filter (60B2h/68B2h)	0.01 ms	0 to 6400	I16	rw	NO	ALL	YES
60B2h/ 68B2h	00h	Torque offset	• Set the offset of the torque command (torque feedforward). • During slowdown in over-travel inhibition (in emergency stop), the torque feedforward level becomes 0.	0.1%	-32768 to 32767	I16	rw	RxPDO	ALL	Yes

6.3.7 Slow stop function

When a drive prohibition input, servo-off, main power-off, or immediate-stop alarm is detected with immediate stop settings, the motor can be smoothly stopped by applying control while the servo is on.

Applicable range

This function cannot be applied unless the following conditions are satisfied.

Condition for activation of slow stop function:

Control Mode	• Position control, Velocity control, Torque control (Note 1) (Note 2)
Others	• Servo-ON state • Elements other than control parameters, such as torque limit, etc. have been appropriately set, without any problems in normal operations.

(Note 1) During emergency stop, the control mode is forcibly set to position control.

(Note 2) Under full-closed control, the Slow Stop function is not supported. Disable the Slow Stop function for full-closed control.

Relevant parameters

■ **Relevant parameters**

Class	No.	Attribute	Title	Range	Unit	Function
5	05	C	Sequence at over-travel inhibit	0 to 2	-	When Pr5.04 Over-travel inhibition = 0, specify the status during deceleration and stop after application of the over-travel inhibition (POT, NOT). When the Slow Stop function is enabled, set up emergency stop.
5	06	B	Sequence at Servo-Off	0 to 9	-	Specify the status during deceleration and after stop, after servo-off. When the Slow Stop function is enabled, set up emergency stop.
5	07	B	Sequence upon main power off	0 to 9	-	Specify the status during deceleration after main power interrupt or after stoppage. When the Slow Stop function is enabled, set up emergency stop.
5	10	B	Sequence at alarm	0 to 7	-	Specify the status during deceleration and after stop, after occurrence of alarm. When the Slow Stop function is enabled, set up emergency stop
5	56	B	Slow stop deceleration time setting	0 to 10000	ms / (1000 r/min)	Sets the deceleration time under slow stop. This function will become effective when Pr6.10 "Function expansion setup" bit 15 is set to 1..
5	57	B	Slow stop S-shape acceleration and deceleration setting	0 to 1000	ms	Sets the S-shape time for deceleration under slow stop. This function will become effective when Pr6.10 “Function expansion setup” bit 15 is set to 1.
6	10	B	Function expansion setup	-32768 to 32767	-	bit10: Fall prevention function in case of alarms 0: Invalid 1: Valid * To enable the slow stop function, set to 1. bit15: Slow stop function 0: Invalid 1: Valid * Set this to 0 for full-closed control.

(To be continued)

Class	No.	Attribute (Note 1)	Title	Range	Unit	Function
6	14	B	Emergency stop time at alarm	0 to 1000	ms	Sets the allowable time for stopping when alarm is triggered for emergency stop. Exceeding this set value will trigger a forced alarm condition. In case the set value is 0 (zero), no emergency stop will be made, but an alarm condition will immediately occur. In case the slow stop function is to be used, set it to a length sufficiently longer than the maximum deceleration time, as the motor velocity will have a delay from the deceleration and stop command. This parameter is valid only for Sequence at alarm. This parameter is invalid for Sequence upon inputting of over-travel inhibition, Sequence at Servo-Off and Sequence at main power OFF. ▼ Refer to Please refer to "ContentsContentsContents" of this section for maximum deceleration time.

Contents

■ Slow stop operation : Linear deceleration

The figure below indicates the case of slow stop operation under alarm.

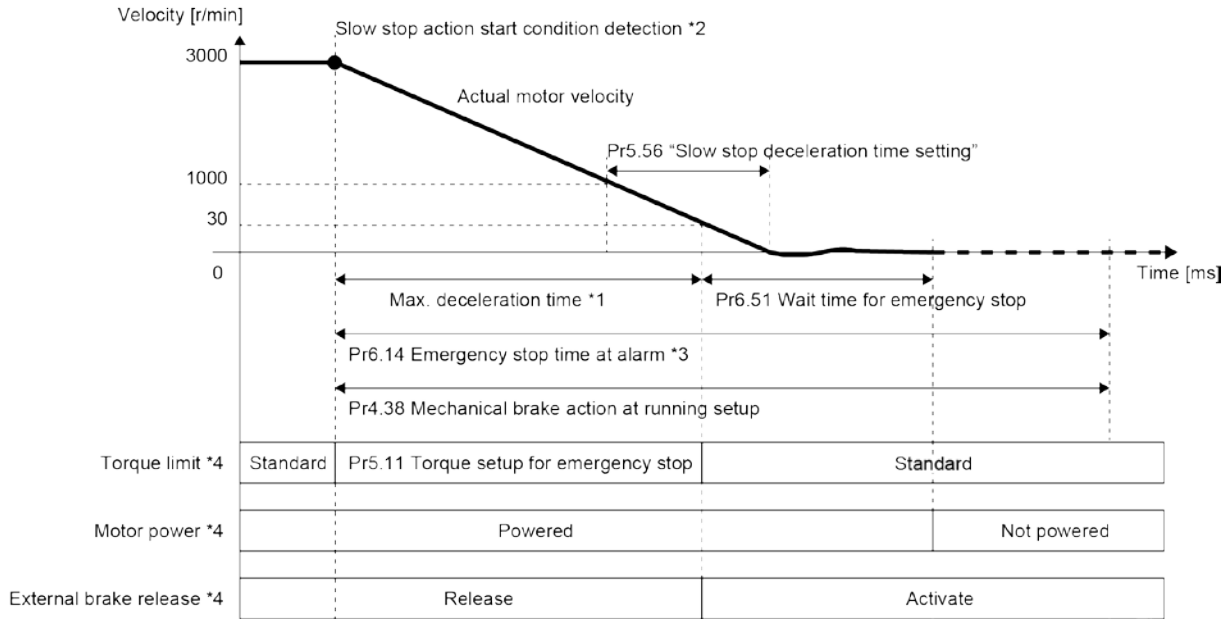

*1 The maximum deceleration time is approximately the value obtained by the following formula:
Maximum deceleration time [ms]

$$= \frac{\text{Maximum velocity under normal operation pattern [r/min])} \times \text{Pr5.56 [ms/(1000 r/min)]}}{1000} + \text{Pr5.57 [ms]}$$

*2 To be the detection of following conditions:
- Drive prohibited input with slow stop function valid setting
- Servo-OFF with slow stop function valid setting.
- Main power OFF with slow stop function valid setting.
- Emergency stop response alarm triggered with slow stop function valid setting.

For the alarm supported emergency stop, refer to "7.1 List of protective function."

*3 Please set Pr6.14 "Emergency stop time at alarm" to a value that is sufficiently long in length than the completion of slow stop operation. The stop judgment under slow stop operation is based on actual velocity. Therefore, the time required for the actual deceleration may take longer than the maximum deceleration time.
In the emergency stop operation from emergency stop response alarm, in case the emergency stop continuation duration exceeds Pr6.14 "Emergency stop time at alarm", an alarm state will be triggered regardless of the actual motor velocity.
Furthermore, immediate alarm condition will be triggered in case emergency stop non-response alarm is generated inside the driver during emergency stop.
Also, Pr6.14 "Emergency stop time at alarm" is valid only for Sequence at alarm.
Pr6.14 "Emergency stop time at alarm" is invalid for Sequence upon inputting of over-travel inhibition, Sequence at Servo-Off and Sequence at main power OFF.

*4 There will be a maximum variance of about 5 [ms] in the switching timing.

▶ Note

Please maintain the main circuit power supply during the time of decelerated stop.

■ Slow stop operation : S-shape deceleration

S shape process at the time of slow stop operation can be made by setting Pr5.57.

▼ Refer to

Refer to the following figure to set Pr5.57.

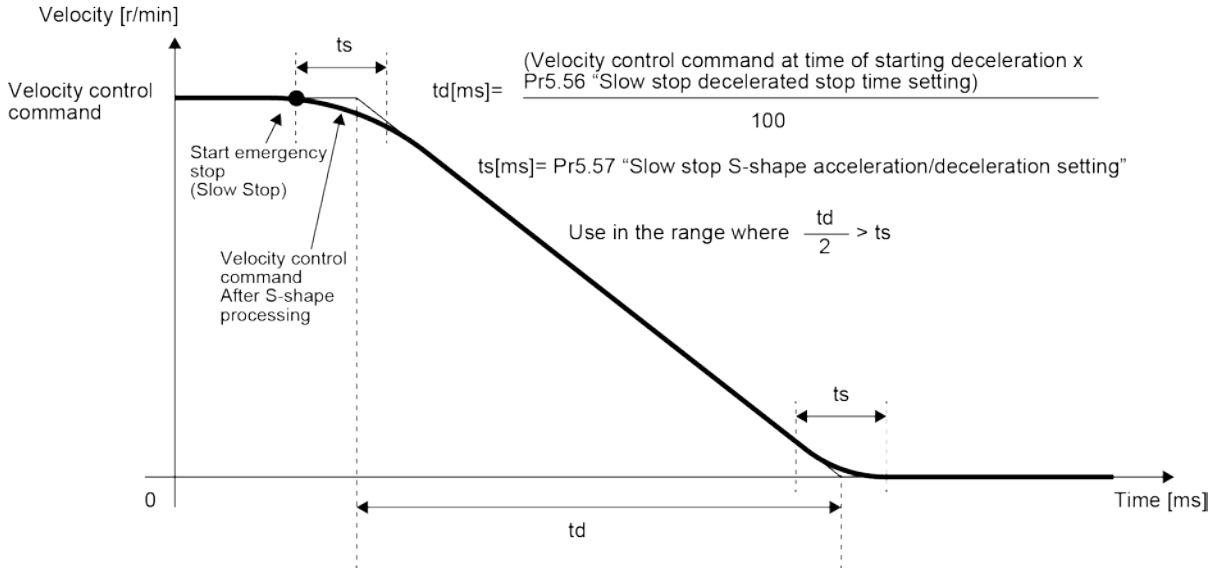

* Velocity control command at the time of starting slow stop operation shall be calculated from the actual velocity.

■ Braking distance

When Pr 5.56 and Pr5.57 has been set, the braking distance under emergency stop will increase by approximately the following formula. Please confirm its influence on the actual machine operations, when using.

- In case of linear deceleration (Pr5.57 = 0)

Linear decelerating time [s]

$$= \frac{\text{(Velocity control command at time of starting deceleration [r/mom])} \times \text{Pr5.56 [ms/(1000)[r/min]}}{1000 \times 1000}$$

Linear deceleration brake distance [revolution]

$$= \frac{\text{(Velocity control command at time of starting deceleration [r/min])} \times \text{Linear decelerating time [s]}}{60 \times 2}$$

$$= \frac{\text{(Velocity control command at time of starting deceleration [r/min])}^2 \times \text{Pr5.56 [ms/(1000)[r/min]}}{60 \times 2 \times 1000 \times 1000}$$

- For S-shape deceleration (Pr5.57 ≠ 0)

S-shape deceleration braking distance [revolution]

= Linear deceleration brake distance [revolution]

$$+ \frac{\text{(Velocity control command at time of starting deceleration [r/min])} \times \text{Pr5.57 [ms]}}{60 \times 1000 \times 2}$$

◆ NOTE

- **The above formulae are braking distances for the velocity control command only and the actual motor control delay has to be taken into account. Furthermore, in case the torque command under deceleration is restricted by emergency stop torque stetting, the braking distance will not be as per the formulae indicated above.**

6.4 Torque saturation protection function

If torque saturated has continued for a fixed period, an alarm can be activated.

Relevant parameters

■ Relevant parameters

Class	No.	Attribute	Title	Range	Unit	Function
6	57	B	Torque saturation anomaly detection time	0 to 5000	ms	Set the torque saturation error protection detection time. If torque saturation erroneously occurs for a set time, Err16.1 "Torque saturation error protection" occurs. When 0 is set, the value set for Pr7.16 is enabled.
7	03	A	Output setup during torque limit	0-1	-	Set up judgment condition of output while torque is limited by torque control. 0: Turn ON at torque limit including torque command value 1: Turn ON at torque limit excluding torque command value
7	16	B	Frequency of torque saturation protection	0 to 30000	time	If torque saturated is continued during a preset frequency, Err 16.1 "Torque saturation protection" will be activated. The number of times is counted up every 0.25 ms. For example, when 30000 is set, Err16.1 occurs if the torque saturation condition continues for 7.5 seconds. The count is cleared when the torque saturation condition is removed. When the value set for Pr6.57 is other than 0, the value set for Pr6.57 is enabled.

- Set both Pr6.57 and Pr7.16 to 0 to make this function disabled.
- When torque is controlled, this function is disabled and Err 16.1 will not be activated.
- If the emergency stop alarm is activated, this function is disabled and Err 16.1 will not be activated.
- During torque control, if Pr7.03 is 0, the torque limit signal output (TCL) is always ON.
  Please set Pr7.03 to 1 to confirm torque limit signal output.

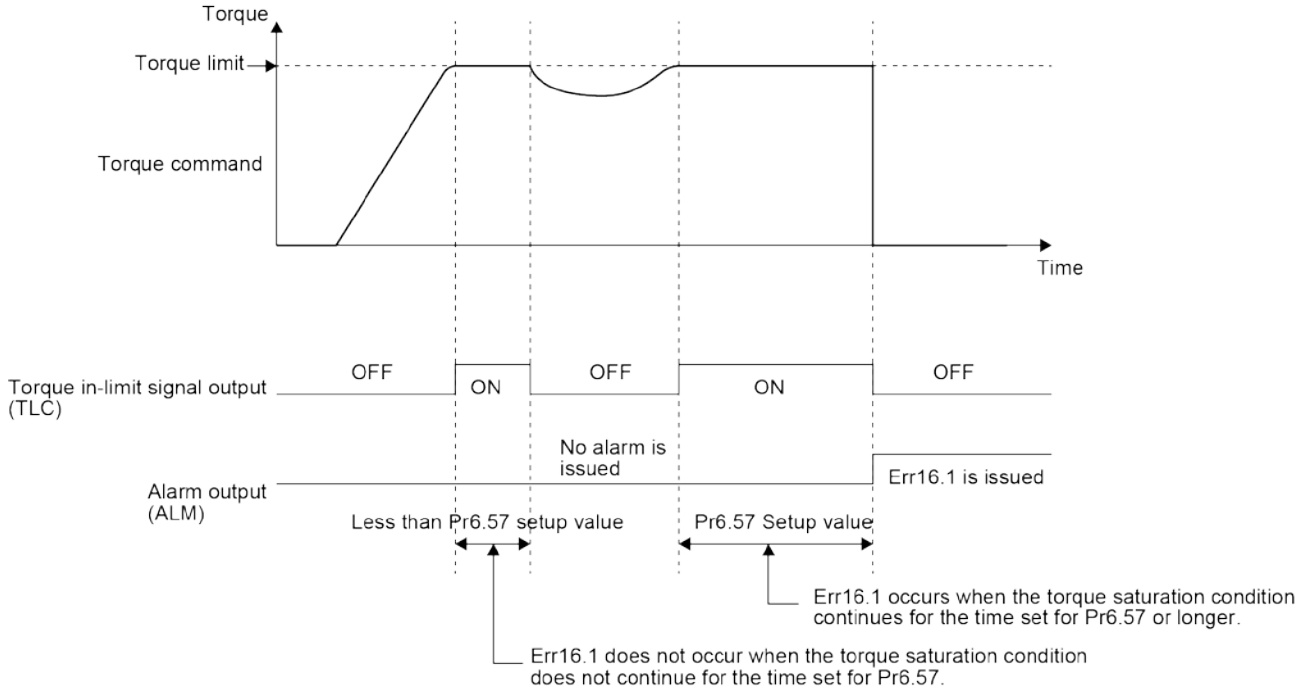

6.5 Position comparison output function

This function enables a general-purpose output or position comparison output terminal to output a pulse signal when the actual position passes the position set for the parameter.

Specification

Item		Description
Trigger output	I/F	With the 2 axes combined, 2-outputs: Photocoupler (Open Collector) or 2-outputs: Line driver
	Logic	Parameter settings (The polarity can be set for each output)
	Pulse width	Parameter settings 0.1 to 3276.7ms (0.1ms unit)
	Delay compensation	Available
Compare source	Encoder (Communication)	Available
	External scale (Communication)	Available
	External scale (A,B-phase)	Available
Compare value	Setting points	8-points per axis
	Setting range	Signed 32bit

Applicable range

This function cannot be applied unless the following conditions are satisfied.

Operating conditions for position comparison output function:

Control Mode	• Available in all control modes
Others	• EtherCAT communication has been established. (ESM state is more than PreOP) • Home position return has been completed. • The elements other than control parameters are correctly set, assuring that the motor can run smoothly. • Other than Countinuous rotating absolute mode (Pr0.15=4)

Caution

In the case of full-closed control, if the number of external scale pulses per motor revolution is extremely lower than 23 bits, the accuracy of position compare output may deteriorate.

The position compare output cannot be monitored as a logical output from PANATERM for Multi or EtherCAT communication. Even when assigned to general-purpose outputs (SO1, SO2), if the position compare output pulse width (time) is shorter than the measurement cycle or communication cycle, monitoring may not be possible.

Note

In MINAS A6 Multi, when using position compare output OCMP1/OCMP2, it is necessary to set Pr4.47 to 1 and assign position compare output (CMP-OUT:14h) to general-purpose output SO1/SO2.

SO1:Pr4.10 SO2:Pr4.11	Pr4.47	SO1 output SO2 output	OCMP1 output OCMP2 output
Assigned to CMP-OUT:14h	0	CMP-OUT	No output
	1	CMP-OUT	CMP-OUT
Assigned except for CMP-OUT	0	Assigned output	No output
	1	Assigned output	No output

Relevant parameters

■ Relevant parameters

Class	No.	Attribute	Title	Range	Unit	Function
4	10	C S	SO1 output selection	-2147483648 to 2147483647	-	When using SO1 output as position compare output (CMP-OUT), assign position compare output (CMP-OUT: 14h) to Pr4.10 for all control modes. A-axis position compare output : 1315860 (00141414h) B-axis position compare output : 538186772 (20141414h) * Do not make any other settings.
4	11	C S	SO2 output selection	-2147483648 to 2147483647	-	Set the function assignment for SO2 output. The setting method is the same as Pr4.10.
4	44	R	Position comparison output pulse width setting	0 to 32767	0.1 ms	Set the pulse width of position comparison output. No pulse is output when 0 is set.
4	45	R	Position comparison output polarity selection	0 to 7	—	Set the polarity of position comparison output by bit setup for each output terminal. • Setup bits bit0: SO1 , OCMP1 bit1: SO2 , OCMP2 • Setup values of Each setting bit 0: The output photocoupler of SO1/SO2 turn ON, and OCMP1/OCMP2 turn L level during pulse output. 1: The output photocoupler of SO1/SO2 turn OFF, and OCMP1/OCMP2 turn H level during pulse output.
4	47	R	Pulse output selection	0 to 1	—	Set 1 to use the position comparison output signal (COMP1/COMP2). 0: OCMP1/OCMP2 disabled 1: OCMP1/OCMP2 enabled
4	48	A	Position comparison value 1	-2147483648 to 2147483647	Command unit	Set the comparison value for position comparison value 1.
4	49	A	Position comparison value 2	-2147483648 to 2147483647	Command unit	Set the comparison value for position comparison value 2.
4	50	A	Position comparison value 3	-2147483648 to 2147483647	Command unit	Set the comparison value for position comparison value 3.
4	51	A	Position comparison value 4	-2147483648 to 2147483647	Command unit	Set the comparison value for position comparison value 4.
4	52	A	Position comparison value 5	-2147483648 to 2147483647	Command unit	Set the comparison value for position comparison value 5.
4	53	A	Position comparison value 6	-2147483648 to 2147483647	Command unit	Set the comparison value for position comparison value 6.
4	54	A	Position comparison value 7	-2147483648 to 2147483647	Command unit	Set the comparison value for position comparison value 7.
4	55	A	Position comparison value 8	-2147483648 to 2147483647	Command unit	Set the comparison value for position comparison value 8.
4	56	R	Position comparison output delay compensation amount	-32768 to 232767	0.1 us	Compensate the delay in the position comparison output signaled by the circuit.

(To be continued)

Class	No.	Attribute	Title	Range	Unit	Function
4	57	R	Position comparison output assignment setting	-2147483648 to 2147483647	-	Set the output terminals corresponding to position comparison values 1 to 8 by bit setup.Multiple position comparison values can be set up on one output terminal. • Setup bits bit0 to 3: Position comparison value 1 bit4 to 7: Position comparison value 2 bit8 to 11: Position comparison value 3 bit12 to 15:Position comparison value 4 bit16 to 19:Position comparison value 5 bit20 to 23:Position comparison value 6 bit24 to 27:Position comparison value 7 bit28 to 31:Position comparison value 8 • Setup values of Each setting bit 0000b:Output disabled 0001b:Allocated to SO1, OCMP1 0010b:Allocated to SO2, OCMP2 Other than above: For manufacturer's use (Do not set.)

Operation

- When the actual position of the encoder passes a position comparison value (Pr4.48 to Pr4.55), a pulse with the time width set for the position comparison output pulse width setting (Pr4.44) is output

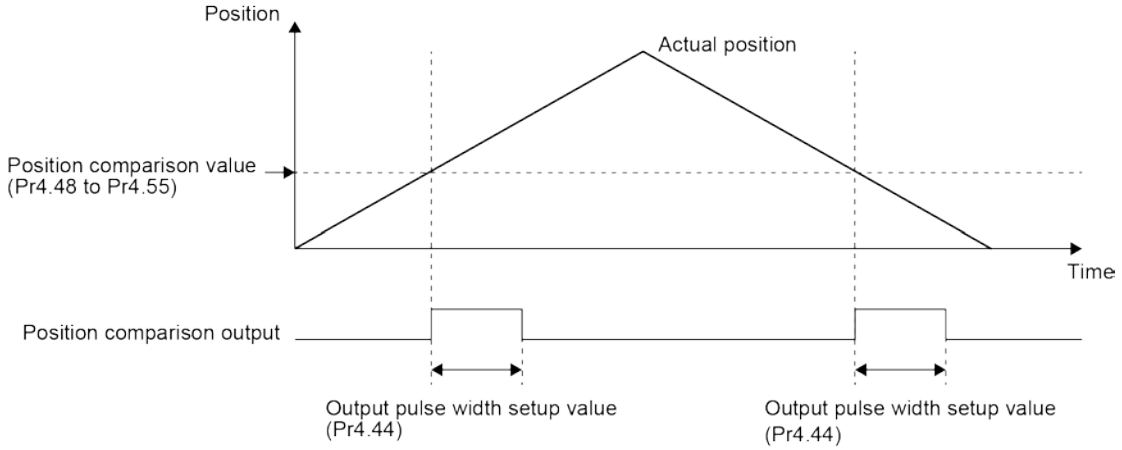

- A pulse is output when the position comparison value is passed and the relationship in size changes, irrespective of the passing direction of the encoder position.
- Multiple position comparison values can be set up on one position comparison output.
- If, during pulse output, the encoder position or external scale position passes the position comparison value in situations such as when the operation direction is reversed or multiple position comparison values are set, the ON status of pulse output continues throughout the period between the point of the last passage and the output pulse width setup value.

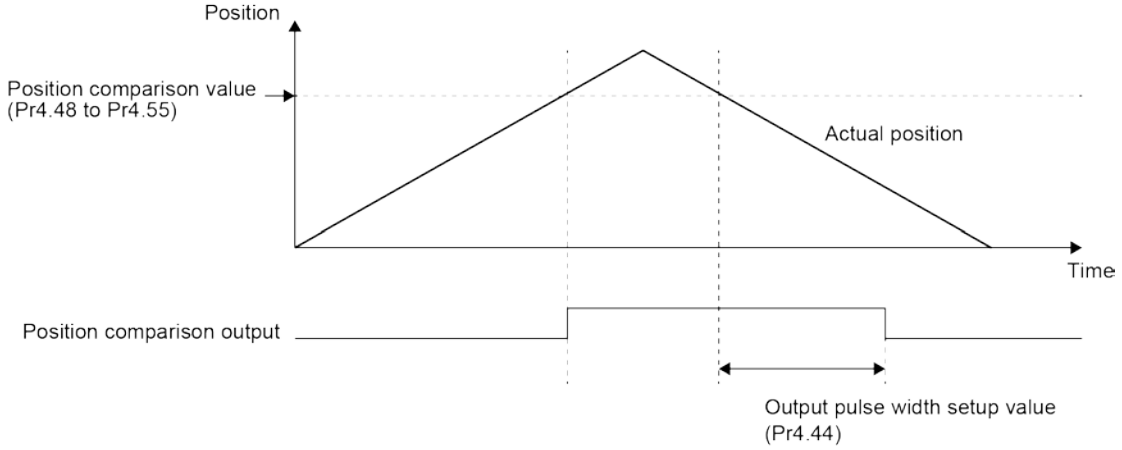

- Also when the position stops at the same position as the position comparison value, the pulse is output only once as with the case of passage.

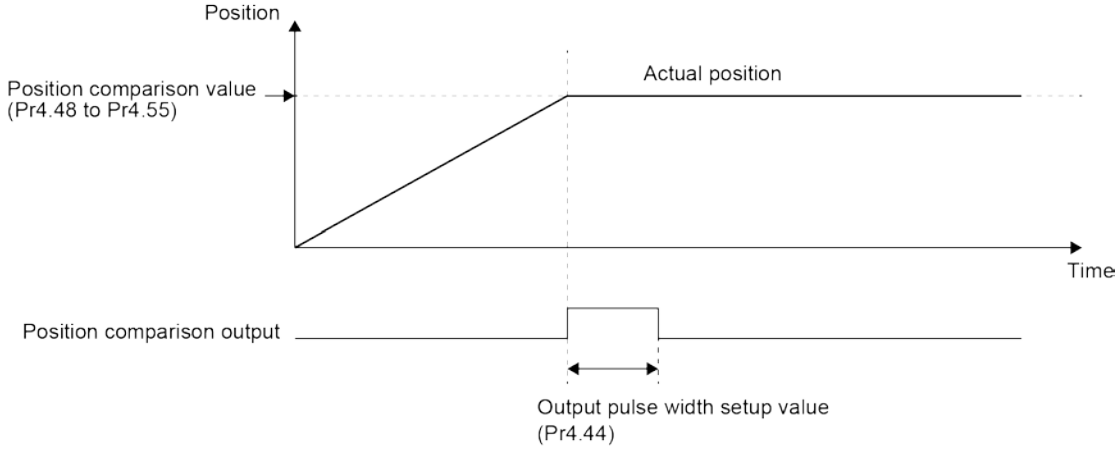

- The position comparison output function sends outputs while automatically compensating, based on the previous motor speed, the errors caused by the time of delay of encoder serial communication, etc. In addition, the amount of correction can also be adjusted with the setup of the amount of position comparison output delay correction (Pr4.56).

6.6 Single-turn absolute function

This function uses the absolute encoder as an absolute system only for single-turn absolute position data without connecting the battery power.
The movable range of the motor is limited by single-turn data of the absolute encoder.

Applicable range

This function operates under the following conditions.

Operating conditions for the single-turn absolute function

Control Mode	• Position control, Velocity control, Torque control
Others	• The absolute encoder must be connected.

Caution

- This function is enabled by setting Pr0.15 "Absolute encoder setup" to 3.
- If the motor (encoder) position or command position exceeds the motor working range (single-turn data of the encoder), Err34.1 "Single-turn absolute working range error protection" occurs.
- When Err34.1 "Single-turn absolute working range error protection" has been activated, the motor is decelerated and stopped according to Pr5.10 "Sequence at alarm".
- When this function is enabled, multi-turn data for the absolute encoder is not used. Thus, alarms related to multi-turn data (Err40.0 "Absolute system down error protection", Err41.0 "Absolute counter over error protection", Err42.0 "Absolute over-speed error protection", and Err45.0 "Absolute multi-turn counter error protection") and battery alarms are not detected.

Relevant parameters

■ **Relevant parameters**

Class	No.	Attribute	Title	Range	Unit	Function
0	15	C	Absolute encoder setup	0 to 4	-	Select the use method of the absolute encoder. (Note 1) 0: Use as an absolute mode. 1: Use as an incremental mode. 2: Use as an absolute mode, but ignore the multi-turn counter over. 3: Use as an absolute mode, but not use multi-turn counter. (single-turn absolute mode) 4: Use as an absolute mode, but any value can be set for the upper limit of the multi-turn counter, and ignore the multi-turn counter over.(Countinuous rotating absolute mode)

(Note 1) During full-closed controlling, treated as an incremental encoder (setting value = 1) for internal control.

Input range of the command position for EtherCAT communication

The following shows the input range of the command position when the single-turn absolute function is enabled.
Note that the value below is the input range when the electronic gear ratio is 1/1 and the 607Ch/687Ch (Home offset) is 0.
For the input range when the electronic gear ratio and 607Ch/687Ch(Home offset) are set, refer to the operation example in the following "Operation example".

		Position command input range
Absolute encoder	23bit	0 to 2^{23}-1 (8388607)

Operation example

The effective range of the single turn is as follows.

- CCW = Positive direction, electronic gear ratio = 1/1, 607Ch/687Ch(Home offset) = 0

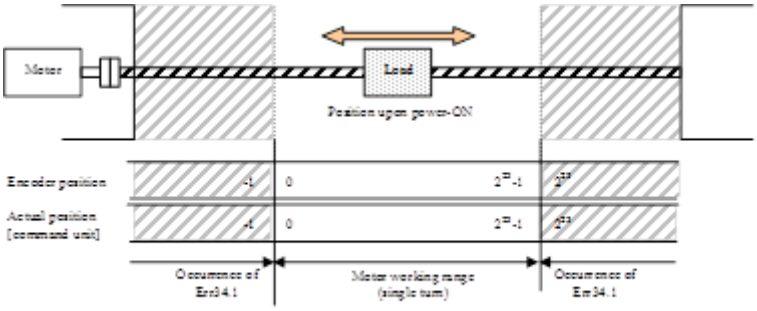

- CCW = Positive direction, electronic gear ratio = 1/2, 607Ch/687Ch(Home offset) = 0

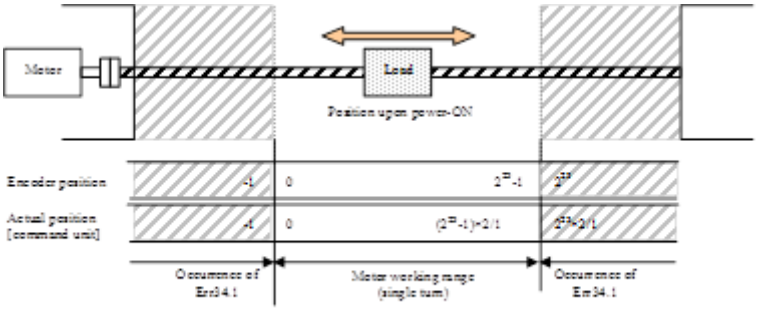

- CCW = Positive direction, electronic gear ratio = 1/1, 607Ch/687Ch(Home offset) = 10000

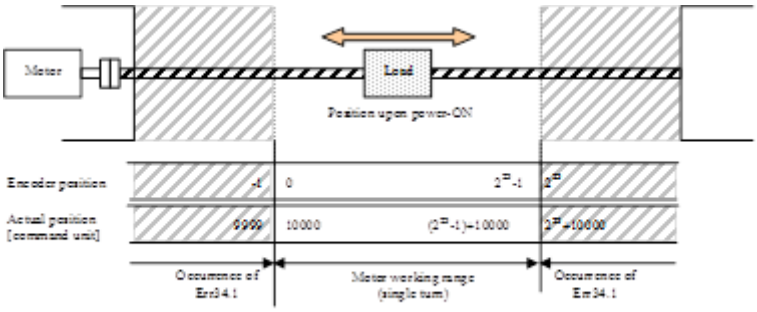

Cautions on the motor position upon power-ON

The motor working range is determined depending on the motor position upon power-ON.
(Operation example with a 23 bit absolute encoder)

(1) When the power-ON position is as shown in the figure below, the motor working range is the single-turn data range from the power-ON position.

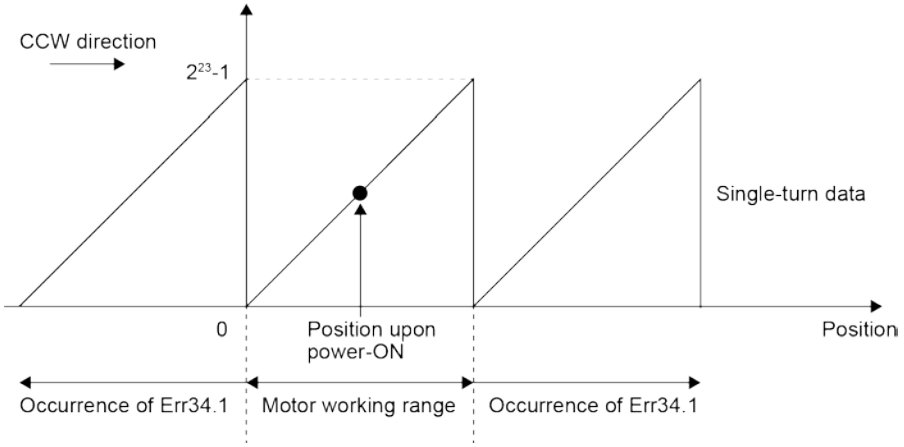

(2) When the power is turned off at the position in Figure (1) and then turned on again after the motor is moved to the position in the figure below, the motor working range will be changed.

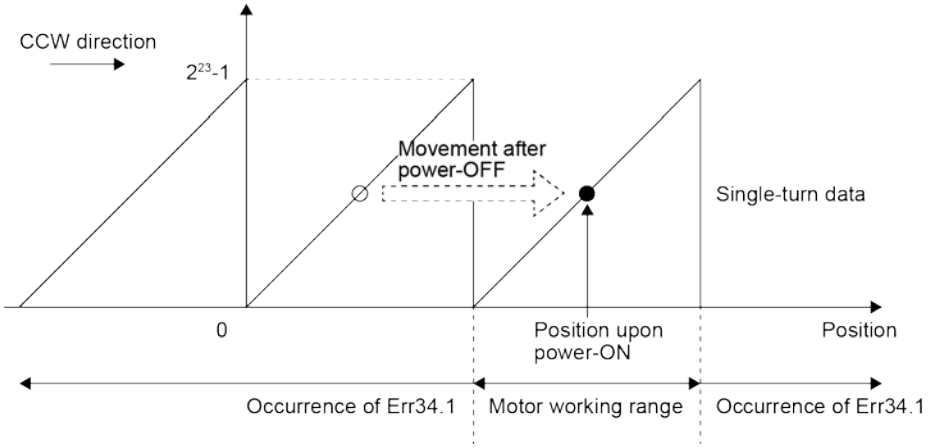

(3) If the power is turned on when the power-ON position is near the limit of the motor working range, the motor working range is exceeded if the motor operates even if only slightly, causing Err34.1 "Single-turn absolute working range error protection".

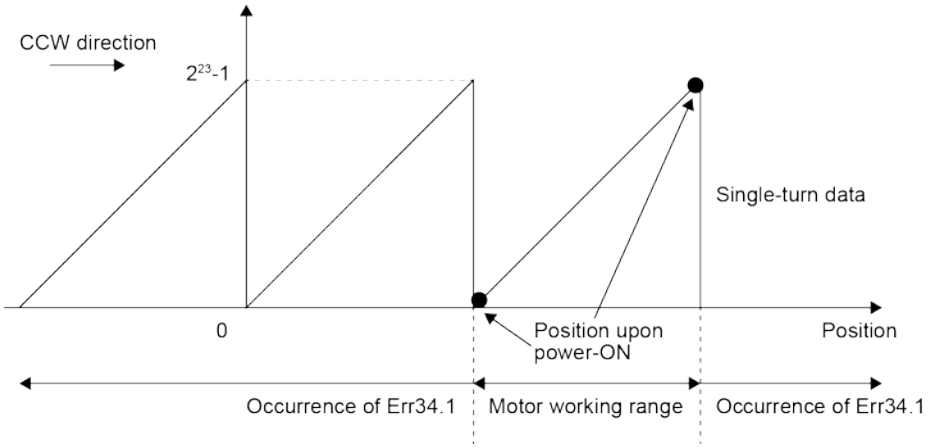

6.7 Infinitely rotation absolute function

This function allows you to set any upper limit value for absolute encoder multi-turn data.

With this function, it is possible to determine the turn angle (position) of a turntable and such other applications, even in the case of continuous turn in one direction.

In addition, because this is an absolute encoder, the home position return after the power is re-powered on is unnecessary.

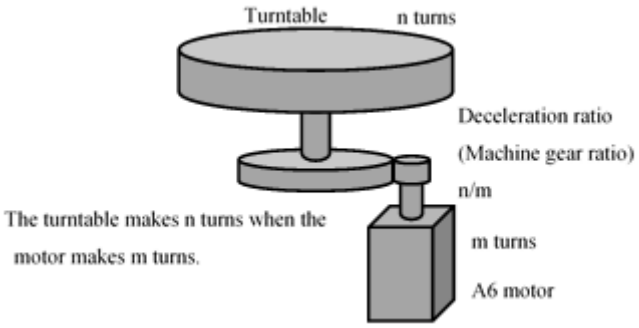

Applicable range

This function cannot be applied unless the following conditions are satisfied.

Operating conditions for continuous rotating absolute encoder function:

Control Mode	• Position control, Velocity control, Torque control
Others	• The encoder is a 23 bit resolution absolute encoder. • The following equation holds and the solution is an integer: Command position per turn of turntable = Encoder resolution (2^{23}) / electronic gear ratio / reduction ratio (n/m) * Reduction ratio is an integer less than or equal to (2^{31}-1). • The elements other than control parameters are correctly set, assuring that the motor can run smoothly.

Relevant parameters

■ Relevant parameters

Class	No.	Attribute	Title	Range	Unit	Function
0	15	C	Absolute encoder setup	0 to 4	-	Select the use method of the absolute encoder. (Note 1) 0: Use as an absolute mode. 1: Use as an incremental mode. 2: Use as an absolute mode, but ignore the multi-turn counter over. 3: Use as an absolute mode, but not use multi-turn counter. (single-turn absolute mode) 4: Use as an absolute mode, but any value can be set for the upper limit of the multi-turn counter, and ignore the multi-turn counter over.(Countinuous rotating absolute mode)
6	88	C	Absolute encoder multi-turn data upper-limit value	0 to 65534	-	Set the upper-limit value for absolute encoder multi-turn data when Pr0.15 is set to 4. When the multi-turn data is more than the value set for this parameter, the multi-turn data changes to 0. When the multi-turn data falls below 0, multi-turn data will change to the set value. When set to Pr0.15 = 0 or 2(absolute mode), the upper limit of the absolute rotation data becomes 65535, regardless of this setting. This setting will become invalid when Pr0.15 is set to 1 or 3. When Pr0.15 is set to 4, Pr6.88=0 makes a motion equivalent to that of Pr6.88=1.

(Note 1) Handled as an incremental system (Set value =1) in internal control under full-closed control.

Related object

Index	Sub Index	Name	Description	Units	Range	Data Type	Access	PDO	Op-mode	EEPROM
607Ch /687Ch	00h	Home offset	After the homing position control mode (hm), position information is set so that the detected index pulse position becomes equal to the value of this object. Also, it is added to the position information at the following position information initialization(preset). • At the control power supply ON • When establishing communication (when changing ESM state from Init to PreOP) • When clearing absolute multi-turn • When PANATERM for Multi operation (test run function, frequency characteristic measurement, Z phase search, fit gain) is completed. • When executing pin assign by PANATERM for Multi.	Command	-2147483648 to 2147483647	I32	rw	RxPDO	ALL	Yes

Cautions

- This function is available when Pr0.15 "Absolute encoder setup" is set to "4" with control power cycle is enabled.
- Set Pr6.88 "Absolute encoder multi-turn data upper-limit value" to "(m-1)". "m" corresponds to the denominator of the deceleration ratio.
- The actual position wraps around at the position at which multi-turn data wraps around. Give a position command so that the position will agree with this actual position.
  Refer to
  For the detail of the wraparound process, refer to "TECHNICAL REFERENCE EtherCAT Communication Specification (SX-DSV03456)".
- When using absolute positioning for pp control or this function for csp control, set the movable position (not exceeding wraparound position, within Position range limit (607Bh/687Bh)) to the target position. When set the position that can not be moved to the target position, Err91.1 (Command error protection) occurs.
- Set Pr6.88 "Absolute encoder multi-turn data upper-limit value" while not allowing the actual position and command position to exceed 231. When ((Pr6.88+1) × Encoder's resolution performance) – 1 exceeds 231, Err93.8 "Parameter setting fault protection 6" is generated.
- The actual position of motor is set based on 607Eh/687Eh(Polarity) and 607Ch/687Ch(Home offset) and so on.
  Refer to
  For details, refer to "TECHNICAL REFERENCE EtherCAT Communication Specification (SX-DSV03456)".
- When this function is used for the first time, or Pr6.88 is changed to an arbitrary value and cotrol power is re-input, Err92.3 "Inconsistency fault protection of multiple rotation data's upper limit values" is always generated. However, it is not a fault. Once the control power is re-powered on, the error will not occur from the next time.
- Refer to Section "4.7.1 Absolute encoder" for structure of absolute system.
- Set 607Ch/687Ch(Home offset) between "0" to "((Pr6.88 set value +1) * encoder resolution) - 1". When wrong valuse is set, Err93.8 "Parameter setting error protection 6" occurs.

Operation example

The operation is as follows in the case of the deceleration ratio (m=50, n=4) where the turntable makes 4 turns when the motor makes 50 turns.

◆PROCEDURE

1. **Set Pr0.15=4 and Pr6.88=49, and write to EEPROM.**
2. **Re-power on the driver control power (or execute the attribute C enable command).**
3. **The upper-limit value of the multi-turn data on the encoder side is automatically updated when the driver is started up.**
4. **Err.92.3 "Multi-turn data upper-limit value disagreement error protection" occurs.**
5. **Re-power on the driver control power.**
6. **The multi-turn data upper-limit value is enabled and the actual position is generated as shown in the figure below.**
7. **The host device reads the actual position, and initializes the command position.**
8. **Because the actual position wraps around at 2^{23} x 50 - 1, allow for operation with the EtherCAT command position wrapped around in agreement with this.**

Since the multi-rotation data upper limit value is held inside the encoder, the procedure from step 6 above will be performed the next time the amplifier control power is turned on.

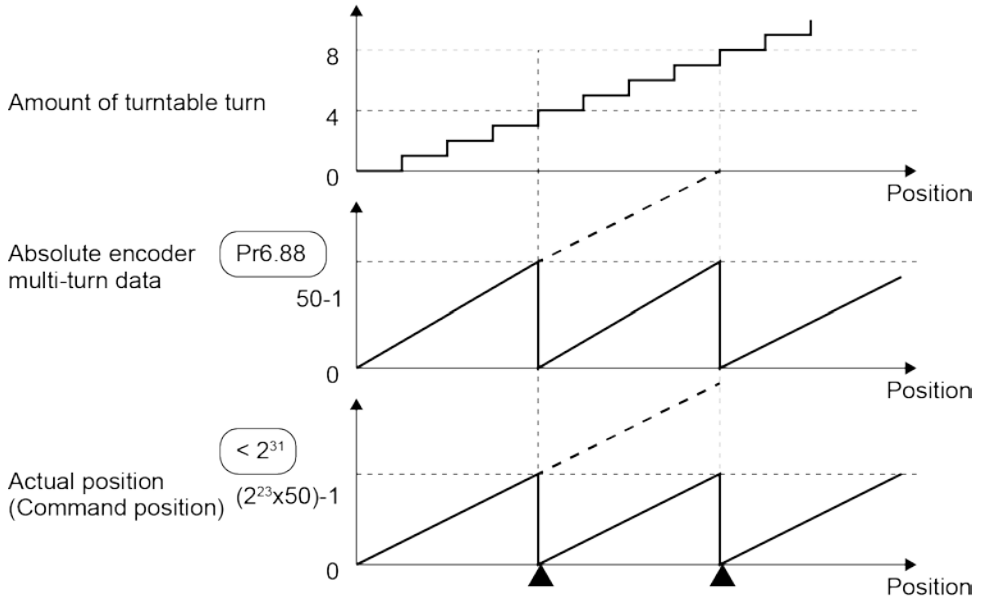

Absolute home position offset

When using the infinite rotation absolute function, the absolute home position offset is as follows.

- CCW = Positive direction, electronic gear ratio = 1/1, Pr6.88 "Absolute encoder multi-turn data upper-limit value" = 2, 607Ch/687Ch(Home offset) = 10000

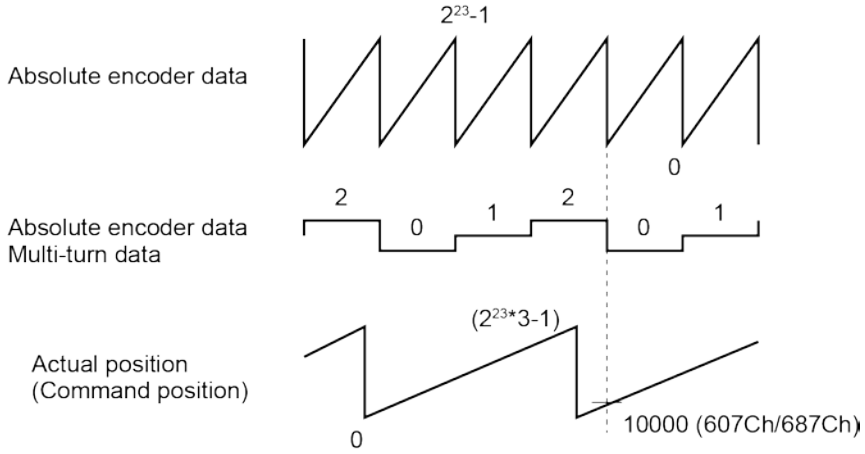

- CW = Positive direction, electronic gear ratio = 1/1, Pr6.88 "Absolute encoder multi-turn data upper-limit value" = 2, 607Ch/687Ch(Home offset) = 10000

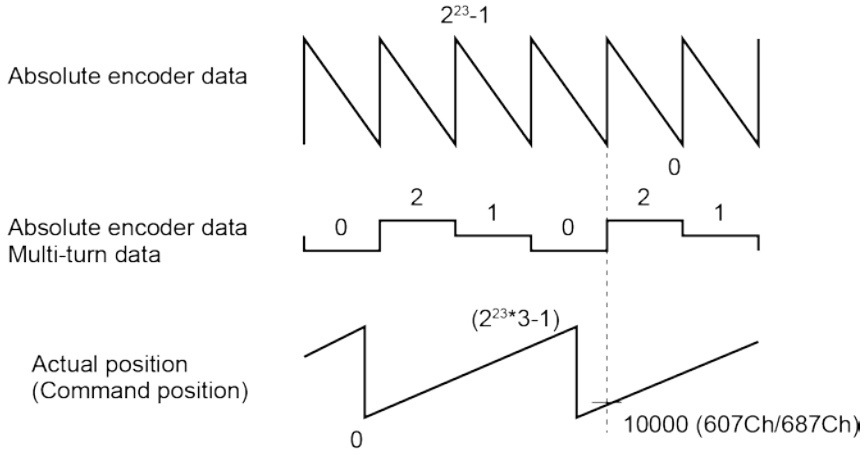

6.8 Deterioration diagnosis warning function

This is a function to check the changes in motor and connected equipment characteristics to output deterioration diagnosis warning.

Relevant parameters

■ Relevant parameters

Class	No.	Attribute	Title	Range	Unit	Function
5	66	A	Deterioration diagnosis convergence judgment time	0 to 10000	0.1 s	Sets the time required to deem that Real-time auto tuning load characteristics estimate has converged when deterioration diagnosis warning function is activated (Pr6.97 bit 1 = 1).When the set value is 0, it will be set automatically inside the driver in accordance with Pr6.31 (Real time auto tuning convergence velocity). Note When Pr6.31 (Real time auto tuning convergence velocity) = 0, the deterioration diagnosis warning judgment for load characteristics estimate will be invalid.
5	67	A	Deterioration diagnosis inertia ratio upper limit value	0 to 10000	%	Sets the upper and lower limit values for inertia ratio estimate in deterioration diagnosis judgment when deterioration diagnosis warning is valid (Pr6.97 bit 1 = 1) and load characteristics estimate convergence has been completed. Note The set resolution shall be in units of 0.2%.
5	68	A	Deterioration diagnosis inertia ratio lower limit value			
5	69	A	Deterioration diagnosis unbalanced load upper limit value	-1000 to 1000	0.1 %	Sets the upper and lower limit values for unbalanced load estimate in deterioration diagnosis judgment when deterioration diagnosis warning is valid (Pr6.97 bit 1 = 1) and load characteristics estimate convergence has been completed. Note The set resolution shall be in units of 0.2%.
5	70	A	Deterioration diagnosis unbalanced load lower limit value			
5	71	A	Deterioration diagnosis dynamic friction upper limit value	-1000 to 1000	0.1 %	Sets the upper and lower limit values for dynamic friction estimate in deterioration diagnosis judgment when deterioration diagnosis warning is valid (Pr6.97 bit 1 = 1) and load characteristics estimate convergence has been completed. Note The set resolution shall be in units of 0.2%.
5	72	A	Deterioration diagnosis dynamic friction lower limit value			
5	73	A	Deterioration diagnosis viscous friction upper limit value	0 to 10000	0.1 %/ (10000 r/min)	Sets the upper and lower limit values for viscous friction coefficient estimate in deterioration diagnosis judgment when deterioration diagnosis warning is valid (Pr6.97 bit 1 = 1) and load characteristics estimate convergence has been completed. Note The set resolution shall be in units of 0.2%.
5	74	A	Deterioration diagnosis viscous friction lower limit value			
5	75	A	Deterioration diagnosis velocity setting	-20000 to 20000	r/min	Outputs deterioration diagnosis velocity output (V-DIAG) when deterioration diagnosis warning is valid (Pr6.97 bit 1 = 1) and the motor velocity is within the range of Pr5.75 ± Pr4.35 (velocity coinciding width). Note Deterioration diagnosis velocity output has a 10 [r/min] hysteresis.
5	76	A	Deterioration diagnosis torque average time	0 to 10000	ms	Sets time required to calculate the torque command average value when deterioration diagnosis warning is valid (Pr6.97 bit 1 = 1) and diagnosis velocity output (V-DIAG) is ON. Note • Time from diagnosis velocity output (V-DIAG) ON to the start judgment for upper and lower value of torque command average value is also a part of the set time for this parameter. • If the setting value is 0, the torque command average value is not calculated.

(To be continued)

Class	No.	Attribute	Title	Range	Unit	Function
5	77	A	Deterioration diagnosis torque upper limit value	-1000 to 1000	0.1%	Sets the upper and lower limit values of torque command average value when deterioration diagnosis warning is valid (Pr6.97 bit 1 = 1) and deterioration diagnosis velocity output (V-DIAG) is ON.
5	78	A	Deterioration diagnosis torque lower limit value			
6	97	B	Function expansion setup 3	-2147483648 to 2147483647	-	Bit 1 to set the deterioration diagnosis warning function to valid or invalid. 0: Invalid 1: Valid

Cautions

- When the upper limit value is set to the maximum value, the upper limit judgment will become invalid.
- When the lower limit value is set to the minimum value, the lower limit judgment will become invalid.
- In case upper limit value ≤ lower limit value, then both the upper limit and lower limit judgment will become invalid.

Due to the USB, EoE communication delay, the average torque command value acquired via USB, EoE may differ from the actual value inside the driver module (0 may be displayed even when the actual value is not 0.).

Contents

Deterioration diagnosis warning functions for the following five types of data can be used by setting bit 1 of Pr6.97 "Function expansion setup 3" to 1.

(1) Inertia ratio

(2) Unbalanced load

(3) Dynamic friction

(4) Viscous friction

(5) Torque command average value

■ Deterioration diagnosis warning for load characteristic estimates (Inertia ratio, Unbalanced load, Dynamic friction, Viscous friction)

- Deterioration diagnosis warning judgment for four load characteristics estimates (inertia ratio, unbalanced load, dynamic friction, and viscous friction coefficient) can be used in case real-time auto tuning load characteristics estimate is valid.

Refer to
Refer to items "5.1.1 Real-time auto tuning", "5.1.3 Real-time auto tuning (Two-degree-of-freedom control mode standard type)", "5.1.4 Real-time auto tuning (Two-degree-of-freedom control mode synchronization type)".

- The abovementioned deterioration diagnosis warning judgment will become effective when the required operational conditions for load characteristics estimate has continued in total for Pr5.66 "deterioration diagnosis convergence judgment time" or more, and the load characteristics estimate has converged. Once it has become effective, it will remain in effect until Pr6.97 bit 1 is set to 0 (invalid) or the Real-time auto tuning load characteristics estimate is invalidated.
- For each load characteristics estimate value, its upper and lower limit value can be set by the parameters as indicated in the following table. In case the load characteristic estimates has exceeded the upper or lower limit values for changes in load characteristics estimate, it generates deterioration diagnostic warning WngAC.

	(1) Inertia ratio	(2) Unbalanced load	(3) Dynamic friction	(4) Viscous friction
Upper limit value	Pr5.67	Pr5.69	Pr5.71	Pr5.73
Lower limit value	Pr5.68	Pr5.70	Pr5.72	Pr5.74

- Set resolution for the upper and lower limit of friction torque estimates (unbalanced load, dynamic friction, and viscous friction coefficient) shall be in units of 0.2%.
- In case Pr6.31 "Real time auto tuning estimation speed" is set to 0 and is estimate stopped from the start or before the load characteristics estimate results has been confirmed, deterioration diagnosis warning judgment will become invalid even if Real-time auto tuning load characteristics estimate is valid.

■ Deterioration diagnosis warning for constant velocity torque command average value

- Deterioration diagnosis velocity output (V-DIAG) is ON when the motor velocity is within the range of Pr4.35 "Speed coincidence range" of Pr5.75 "Deterioration diagnosis velocity setting".
- When deterioration diagnosis velocity output (V-DIAG) is turned ON, torque command average calculation will start and after lapse of the set time of Pr5.76, deterioration diagnosis judgment by torque command average will become effective. This will continue while deterioration diagnosis velocity output (V-DIAG) remains output ON, however will return to invalid condition when the output is turned OFF.
- The upper limit and lower limit values for torque command average can be set by parameters Pr5.77 and 5.78 respectively. Deterioration diagnostic warning WngAC is generated in case these upper or lower limit values have been exceeded for changes in the load characteristic estimates.

When a deterioration diagnosis warning does not occur for the torque command average value

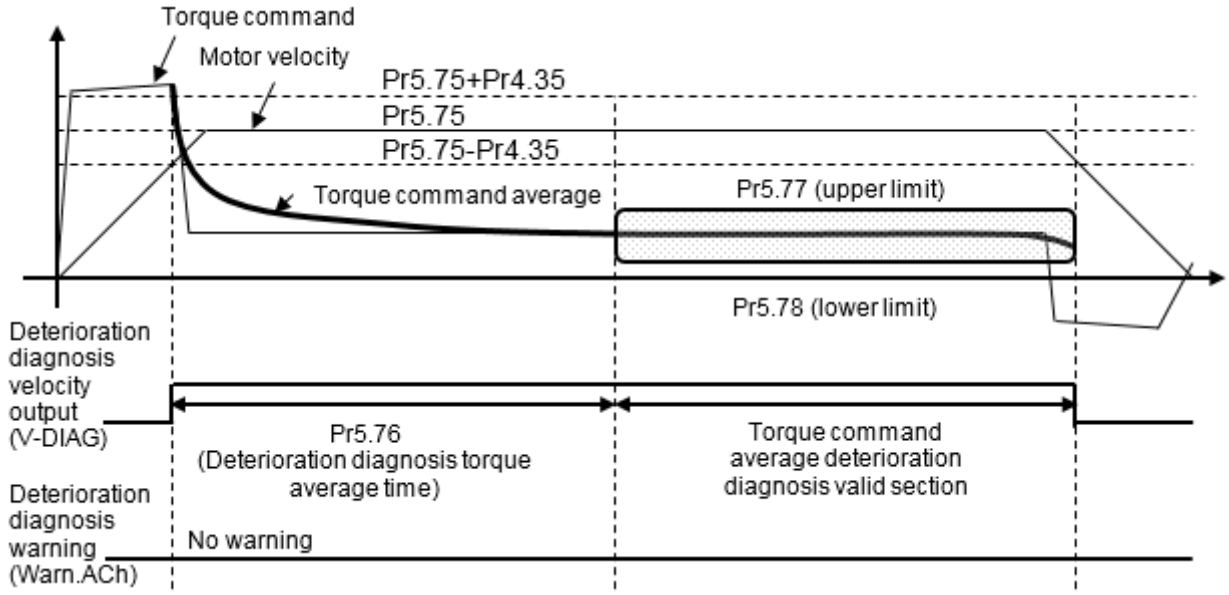

When a deterioration diagnosis warning occurs for the torque command average value

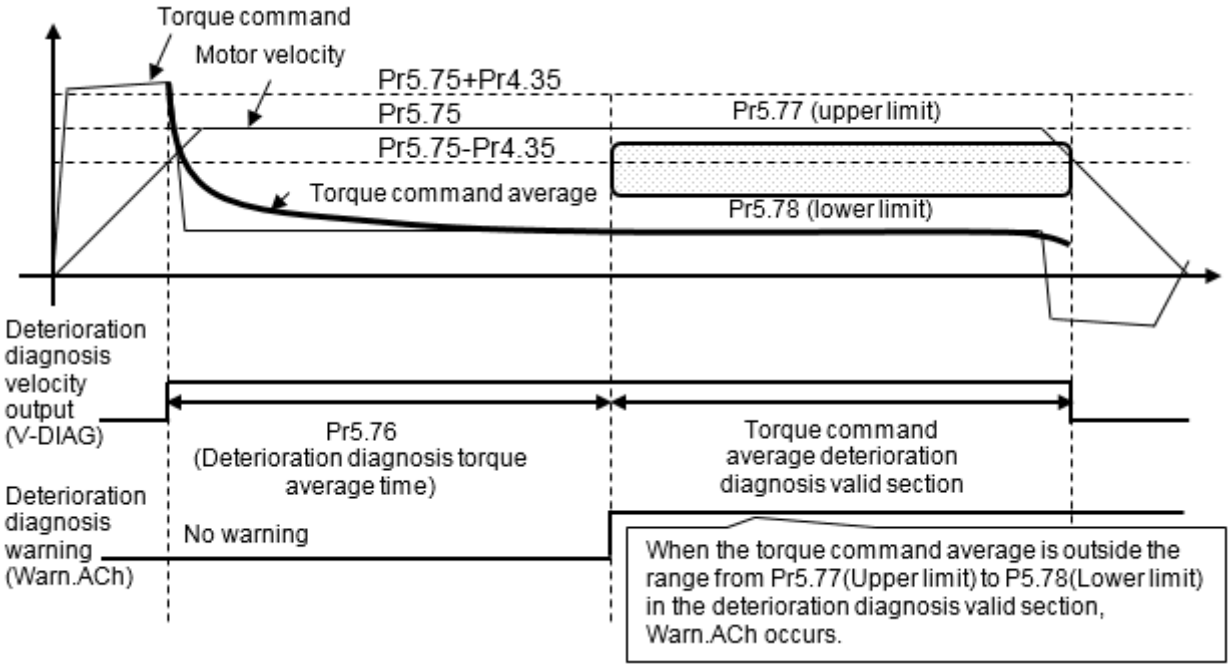

6.9 Retracting operation function (Not supported)

MINAS A6 Multi does not support retracting operation function.

6.10 Backlash correction function (Not supported)

MINAS A6 Multi does not support retracting operation function.

7

Protective Functions

7.1 List of protective function

This driver module incorporates various protective functions. When a protective function is enabled, the driver module turns OFF the alarm signal (ALM) and displays the error number on 7-segment LED of the panel section at front surface.

Note

Alarms does not occur for axes that are disabled by Pr0.20 “Axis limit setting”.

Error No.		Alarm	Attribute				EtherCAT communication related (Note 4)(Note 7)
Main	Sub		History	Can be cleared (Note 3)	Emergency stop (Note 6)	Common (Note 8)	
11	0	Control power supply undervoltage protection		✓		✓	
12	0	Over-voltage protection	✓	✓		✓	
13	0	Main power supply undervoltage protection (between P to N)		✓	✓		
	1	Main power supply undervoltage protection (AC interception detection)		✓	✓		
14	0	Over-current protection	✓				
15	0	Over-heat protection	✓		✓		
	1	Encoder over-heat error protection	✓		✓		
16	0	Over-load protection	✓	✓(Note 1)			
	1	Torque saturation error protection	✓	✓			
17	0	Mechanical brake circuit voltage error protection		✓	✓		
	1	Mechanical brake circuit overload protection	✓	✓	✓		
21	0	Encoder communication disconnect error protection	✓				
	1	Encoder communication error protection	✓				
23	0	Encoder communication data error protection	✓				
24	0	Position deviation excess protection	✓	✓	✓		
	1	Speed deviation excess protection	✓	✓	✓		
25	0	Hybrid deviation excess error protection	✓		✓		
26	0	Over-speed protection	✓	✓	✓		
	1	2nd over-speed protection	✓	✓			
27	1	Absolute clear protection	✓				
	4	Position command error protection	✓	✓	✓		
	6	Operation command contention protection	✓	✓			
	7	Position information initialization error protection	✓				
29	1	Counter overflow protection 1	✓			✓	
	2	Counter overflow protection 2	✓			✓	
31	0	Safety function error protection 3	✓			✓	
	2	Safety function error protection 5	✓			✓	
33	0	Duplicated input allocation error 1 protection	✓			✓	
	1	Duplicated input allocation error 2 protection	✓			✓	
	2	Input function number error 1 protection	✓			✓	
	3	Input function number error 2 protection	✓			✓	
	4	Output function number error 1 protection	✓			✓	
	5	Output function number error 2 protection	✓			✓	
	8	Latch input allocation error protection	✓				
34	0	Software limit protection	✓	✓			
	1	One revolution absolute working range error	✓	✓			

(To be continued)

Error No.		Alarm	Attribute				EtherCAT communication related (Note 4)(Note 7)
Main	Sub		History	Can be cleared (Note 3)	Emergency stop (Note 6)	Common (Note 8)	
36	0-1	EEPROM parameter error protection					
37	0-2	EEPROM check code error protection					
38	0	Over-travel inhibit input protection 1		✓			
	1	Over-travel inhibit input protection 2		✓			
	2	Over-travel inhibit input protection 3	✓				
40	0	Absolute system down error protection	✓	✓(Note 2)			
41	0	Absolute counter over error protection	✓				
42	0	Absolute over-speed error protection	✓	✓(Note 2)			
44	0	Absolute single turn counter error protection	✓				
45	0	Absolute multi-turn counter error protection	✓				
46	0	Absolute status error protection	✓				
50	0	External scale connection error protection	✓				
	1	External scale communication error protection	✓				
	2	External scale communication data error protection	✓				
51	0	External scale status error protection 0	✓				
	1	External scale status error protection 1	✓				
	2	External scale status error protection 2	✓				
	3	External scale status error protection 3	✓				
	4	External scale status error protection 4	✓				
	5	External scale status error protection 5	✓				
55	0	A-phase connection error protection	✓				
	1	B-phase connection error protection	✓				
	2	Z-phase connection error protection	✓				
69 (Note 9)	0	Inter-modules communication timeout error protection	✓			✓	
	1	Inter-modules communication CRC error protection	✓			✓	
	2	Power supply module error protection 1	✓	✓		✓	
	3	Power supply module error protection 2	✓		✓	✓	
	4	Power supply module error protection 3		✓		✓	
	5	Inter-modules communication ID setting error protection				✓	
	6	Excess number of driver module connection error protection	✓			✓	
70	0	U-phase current detector error protection	✓				
	1	W-phase current detector error protection	✓				
72	0	Thermal error protection	✓				
80	0	ESM unauthorized request error protection	✓	✓	✓	✓	✓
	1	ESM undefined request error protection	✓	✓	✓	✓	✓
	2	Bootstrap requests error protection	✓	✓		✓	✓
	3	Incomplete PLL error protection	✓	✓		✓	✓
	4	PDO watchdog error protection	✓	✓	✓	✓	✓
	6	PLL error protection	✓	✓	✓	✓	✓
	7	Synchronization signal error protection	✓	✓	✓	✓	✓

(To be continued)

Error No.		Alarm	Attribute				EtherCAT communication related (Note 4)(Note 7)
Main	Sub		History	Can be cleared (Note 3)	Emergency stop (Note 6)	Common (Note 8)	
81	0	Synchronization cycle error protection	✓	✓		✓	✓
	1	Mailbox error protection	✓	✓		✓	✓
	4	PDO watchdog error protection	✓	✓		✓	✓
	5	DC error protection	✓	✓		✓	✓
	6	SM event mode error protection	✓	✓		✓	✓
	7	SyncManager2/3 error protection	✓	✓		✓	✓
84	3	Synchronous establishment initialization error protection	✓			✓	
85	0	TxPDO assignment error protection	✓	✓		✓	✓
	1	RxPDO assignment error protection	✓	✓		✓	✓
	2	Lost link error protection	✓	✓	✓	✓	✓
	3	SII EEPROM error protection	✓	✓	✓	✓	✓
87	0	Forced alarm input protection		✓	✓	✓	✓
	1	Retracting operation completion (I/O) (Not supported)	✓	✓(Note 10)	✓(Note 11)		
	2	Retracting operation completion (communication) (Not supported)	✓	✓(Note 10)	✓(Note 11)		
	3	Retracting operation error (Not supported)	✓	✓(Note 10)	✓		
88	0	Main power undervoltage protection (AC insulation detection 2)		✓	✓	✓	✓
	1	Control mode setting error protection	✓	✓	✓		✓
	2	ESM requirements during operation error protection	✓	✓	✓		✓
	3	Improper operation error protection	✓		✓		✓
91	1	Command error protection	✓	✓			
92	0	Encoder data recovery error protection	✓				
	1	External scale data recovery error protection	✓				
	3	Multi-turn data upper-limit value disagreement error protection	✓				
93	2	Parameter setting error protection 2	✓				
	3	External scale connection error protection	✓				
	8	Parameter setting error protection 6	✓				
94	3	Home position return error protection 2	✓	✓			
95	0-4	Motor automatic recognition error protection					
96	2	Control unit error protection 1	✓				
	3	Control unit error protection 2	✓				
	4	Control unit error protection 3	✓				
	5	Control unit error protection 4	✓				
	6	Control unit error protection 5	✓				
	7	Control unit error protection 6	✓				
	8	Control unit error protection 7	✓				
97	1	Drive module system error 1	✓			✓	
	2	Drive module system error 2	✓			✓	
98	2	Communication hardware error protection 2	✓			✓	
	3	Communication hardware error protection 3	✓			✓	
other		Other error protection	-	-	-	-	-

(Note 1) When Err 16.0 (Over-load protection) is triggered, you can clear it in 10 sec or longer after the error occurs.The alarm clear request input during that period is cleared before it can be cleared.

(To be continued)

(Note 2) When Err 40.0 (Absolute system down error protection) or Err 42.0 (Absolute over-speed error protection) occurs, the alarm cannot be cleared until the absolute encoder is reset.

(Note 3) If the alarm cannot be cleared occurs, remove the alarm cause, turn OFF power to reset.

(Note 4) When clearable alarm other than EtherCAT communication-related error (Err80.*, Err81.*, Err85.*, Err88.*) is occurred, it will be able to clear the alarm in the following way.

- When an alarm clear input (A-CLR) is OFF, or while not assigning, the alarm clearance was performed from EtherCAT communication or PANATERM for Multi(USB communication, EoE communication).
- The alarm clear input (A-CLR) was changed from OFF to ON.

In the following cases, keep in mind that an alarm clearance is not carried out normally.
Example: The alarm clearance is performed from communication (USB or EtherCAT) when A-CLR is ON.

In this case, perform an alarm clearance from communication after turning OFF A-CLR.
Please perform the alarm clearance while motor is stopped after ensuring safety.

▼ Refer to

Please refer to Technical Document "EtherCAT Communication Specifications" (SX-DSV03446)" for details of the alarm clear method of than EtherCAT communication-related error (Err80.*, Err81.*, Err85.*, Err88.*).

(Note 5) If the driver module internal control circuit malfunctions due to excessive noise etc., the display will show as follows:

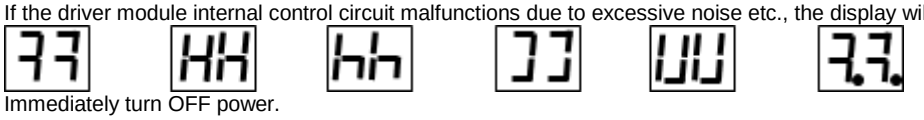

Immediately turn OFF power.

(Note 6) Emergency stop is triggered if Pr 5.10 Sequence at alarm is set to one of 4 to 7 and corresponding alarm is detected.

▼ Refer to

For details, refer to "6.3.4 Sequence at alarm".

(Note 7) About EtherCAT communication-related error (Err80.*, Err81.*, Err85.*, Err88.*), front panel indication or alarm indication of PANATERM for Multi is delayed from actual occurrence of alarm.

(Note 8) Common means that the cause of the alarm is common to Axis A and Axis B. It usually occurs at the same time, but depending on the content, it may not be detected for some axes, and the detection timing may differ for each axis. Alarm clear must be executed from each axis after removing the cause of the alarm.

(Note 9) Alarms detected by PSM are transmitted to all connected driver modules as shown below

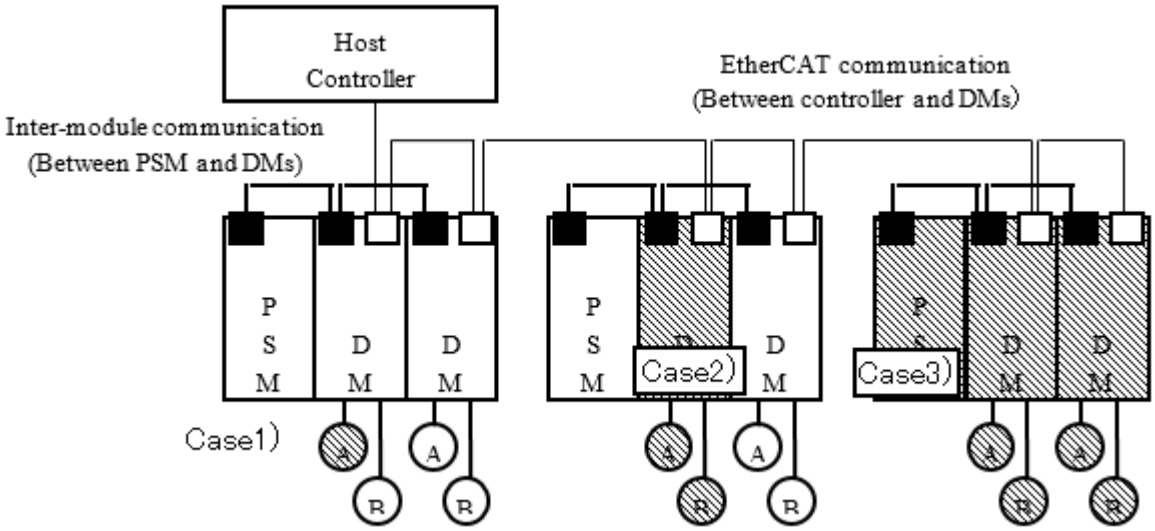

Case1) DM individual alarm (encoder error, motor control error, etc.)
Only the alarm generation axis stops.

Case2) DM common alarm (EtherCAT communication error, DM main power / temperature monitoring, etc.)
All axes in the DM where the alarm occurred stop. (Synchronization within DM)

Case3) PSM related alarm (abnormality in converter, etc.)
All axes of all DMs connected to the PSM that generated the alarm stop.
(Synchronous within DM, asynchronous between DMs)

(Note 10) Depending on the Pr6.86 bit 0 to 2 settings, the properties of error clear vary.
bit 0: Err87.1 (Retracting operation completion (I/O)) alarm clear attribute
bit 1: Err87.2 (Retracting operation completion (communication)) alarm clear attribute
bit 2: Err87.3 (Retracting operation error) alarm clear attribute
0: Unable to clear alarms and 1: Able to clear alarms for all

(Note 11) It is an emergency stop alarm according to the attribute, but when the retracting operation activation condition is established, the operation does not conform to Pr5.10 “Sequence at alarm” but it is determined by the retracting operation function, and an alarm is generated after retracting operation completion.
For details of the retracting operation function, refer to section 6-9.
It behaves as the emergency stop alarm, for example, in a manner that the fall prevention function in alarms works after retracting operation completion.
For the fall prevention function in alarms, refer to section 6-3-6-1.

7.2 Details of protective function

Error No.		Protective function	Causes	Measures
Main	Sub			
11	0	Control power supply undervoltage protection	The voltage of the bus (control power supply) of the driver module has dropped to below the specified value.	Measure the applied voltage of control power connector X11. Check if the rated 24V voltage is secured.
			1) Power supply voltage is low. Instantaneous power failure has occurred	1) Increase the power capacity. Change the power supply
			2) Lack of power capacity...Power supply voltage has fallen down due to inrush current at the control power-on	2) Increase the power capacity.
			3) Failure of driver module (failure of the circuit)	3) Replace the driver module.
			4) Power supply module failed (circuit failure).	4) Replace the power supply module.
12	0	DC busOver-voltage protection	The DC bus (main power supply) voltage of the driver module exceeded the acceptable input voltage range. = Voltage between P and N of the converter portion of the control power supply has exceeded the specified value. Source voltage is high. Voltage surge due to the phase-advancing capacitor or UPS (Uninterruptible Power Supply) have occurred.	Measure the applied voltage of main power connector X102. Check if the voltage is excessive. Input the correct voltage to the power module. Try removing the phase advance capacitor and UPS.
			1) Disconnection of the regeneration discharge resistor	1) Measure the resistance of the external resistor connected between terminal P and B of the driver. Replace the external resistor if the value is ∞.
			2) External regeneration discharge resistor is not appropriate and could not absorb the regeneration energy.	2) Change to the one with specified resistance and wattage.
			3) Failure of driver module (failure of the circuit)	3) Replace the driver module.
			4) Power supply module failed (circuit failure)..	4) Replace the power supply module.

(To be continued)

Error No.		Protective function	Causes	Measures
Main	Sub			
13	0	DC busundervoltage protection	(When bit 0 of Pr5.08 “L/V trip selection upon main power off” of the driver module, if any axis of the driver module is servo-on, the bus bar (main power) voltage is insufficient voltage level In the driver module or power module. It was detected that it decreased to the following.	Measure the applied voltage of main power connector X102. Check if the voltage is insufficient.
			1) Instantaneous power failure has occurred.	1) Change to the main power supply
			2) Lack of power capacity...Power supply voltage has fallen down due to inrush current at the main power-on.	2) Increase the power capacity. For the capacity, refer to Reference specification SX-DSV03451 "Driver and List of Applicable Peripheral Equipments" of Preparation.
			3) Failure of driver module (failure of the circuit)	3) Replace the driver module.
			4) Power supply module failed (circuit failure).	4) Replace the power supply module.
			5) Contact failure in bus bar	5) Check the connection of bus bar.
	1	Main power supply undervoltage protection (AC)	On the servo-on axis of the driver module, the power supply module detected the main power AC400V input shut-off status for the time set in PSM Pr.02 “Main power off detection time”.	Measure the applied voltage of main power connector X102. Check if there is an instantaneous power outage or phase loss.
			1) Instantaneous power failure has occurred.	1) Set up the longer time to PSM Pr.02 (Main power off detecting time). Set up each phase of the power correctly.
			2) Failure of driver module (failure of the circuit)	2) Replace the driver module.
			3) Power supply module failed (circuit failure).	3) Replace the power supply module.
14	0	Over-current protection	The current flowing through the converter part of each axis of the driver module exceeded the specified value.	Remove the cause of overcurrent.
			1) Failure of driver module (failure of the circuit, IGBT or other components)	1) Turn to Servo-ON, while disconnecting the motor. If error occurs immediately, replace with a new driver module.
			2) Short of the motor wire (U, V and W)	2) Check that the motor wire (U, V and W) is not shorted, and check the branched out wire out of the connector. Make a correct wiring connection.
			3) Earth fault of the motor wire	3) Measure the insulation resistance between motor wires, U, V and W and earth wire. In case of poor insulation, replace the motor.
			4) Burnout of the motor.	4) Check the balance of resister between each motor line, and if unbalance is found, replace the motor.
			5) Poor contact of the motor wire.	5) Check the loose connectors. If they are, or pulled out, fix them securely.
			6) Welding of relay contact for dynamic braking due to frequent servo ON/OFF operations.	6) Replace the driver module. Do not use servo ON/OFF during operation.
			7) Timing of command input is same as or earlier than Servo-ON.	7) Enter the commands 100 ms or longer after Servo-ON.

(To be continued)

Error No.		Protective function	Causes	Measures
Main	Sub			
15	0	Over-heat protection	The temperature of the radiator and power element of the driver module exceeded the specified value.	Check the operating temperature range of the driver module.
			1) Ambient temperature has risen over the specified temperature.	1) Improve the ambient temperature and cooling condition.
			2) Use with an overload.	2) Increase the capacity of the driver module and motor. Set up longer acceleration/ deceleration time. Lower the load.
			3) Failure of driver module. (Failure of the temperature detection circuit)	3) Replace the driver module.
	1	Encoder over-heat error protection	The driver module detected that the temperature of each axis encoder exceeded the encoder overheat error level.	Check the operating temperature range of the servo motor.
			1) The ambient temperature of the driver module is high.	1) Improve the ambient temperature and cooling conditions of the servo motor.
			2) Use with overload.	2) I Increase the capacity of the driver module module and motor. Set a longer acceleration/deceleration time. Reduce the load.
			3) Failure of driver module. (Failure of the temperature detection circuit in encoder)	3) Replace the driver module.

(To be continued)

Error No.		Protective function	Causes	Measures
Main	Sub			
16	0	Over-load protection	In the driver module, the overload load factor calculated from the torque command of each axis servo motor exceeded the specified value.	Check if the torque (current) waveform is oscillating with large variations in the vertical direction in EtherCAT communication or PANATERM for Multi. Check the overload warning display and load factor on the front panel or by communication.
			1) Load was heavy and actual torque has exceeded the rated torque and kept running for a long time.	1) Increase the capacity of the driver module and motor. Set up longer acceleration/ deceleration time. Lower the load.
			2) Gain adjustment failed.	2) Make a re-adjustment of gain.
			3) Oscillation and hunching action.	3) Make a wiring as per the wiring diagram. Replace the cables.
			4) Motor vibration, abnormal noise.	4) If auto-tuning function is used, stiffness Lower the setting.
			5) Pr 0.04 “Inertia ratio” setup error.	5) Manually set the appropriate value for Pr 0.04 “Inertia ratio” Set and disable the auto tuning function.
			6) Miswiring, disconnection of the motor	6) Connect the motor wires as shown in the wiring diagram. Replace the cable.
			7) Machine has collided or the load has gotten heavy. Machine has been distorted.	7) Remove machine distortion. Reduce the load. Replace the machine.
			8) Operate the motor while the electromagnetic brake is operating	8) Check the timing to release the brake. Also check Pr4.59 “Mechanical brake signal setup”. Replace the motor.
			9) In the wiring between the axes of the same driver module or between a plurality of servo motors connected to a plurality of driver modules, the motor line or encoder line is mistakenly connected to another axis and miswired.	9) Make a correct wiring by matching the correct motor and encoder wires.
			10) Pr5.12 "Over-load level setup" is too low.	10) Set Pr5.12 "Over-load level setup" to 0 (Set the maximum value allowed for the motor).
			11) Failure of driver module. (Failure of motor drive circuit)	11) Replace the driver module.
			Refer to The over-load protection time characteristics are described on the end of this section.	
	1	Torque saturation error protection	On the driver module, the torque limiting (TLC) status of each axis has continued for the time set in Pr7.16 “Torque saturation error protection frequency” or Pr6.57 “Torque saturation error protection detection time”.	• Check the torque command of the driver module with EtherCAT communication or PANATERM for Multi, and check whether it is restricted by the torque limit. • Take steps to reduce the load factor in the same way as Err16.0 to reduce the absolute value of the torque command.

(To be continued)

Error No.		Protective function	Causes	Measures
Main	Sub			
17	0	Mechanical brake circuit voltage error protection	The power supply input voltage to the mechanical brake output circuit of the motor connector X105 of each axis built in the driver module is smaller than the specified value or larger than the specified value	When not using the mechanical brake, set bit 0 (mechanical brake circuit voltage error protection function) of Pr5.90 " Function extended shared setup 3" to 1: Disabled.
			1) The input voltage of the control power supply exceeded the specified value.	1) Check the input voltage between the terminals of the control power supply and set it to the specified value. Then clear the alarm.
			2) Failure of driver module. (Failure of mechanical brake output circuit.)	2) Replace the driver module.
	1	Mechanical brake circuit overload protection	Excessive current flowed into the mechanical brake output circuit of the motor connector X105 of each axis built in the driver module.	Check the wiring of the external mechanical brake and mechanical brake output.
			1) The BRK + and BRK- terminals of motor connector X105 Short circuited.	1) Check the connector lead wires to see if BRK + and BRK- of motor connector X105 are short-circuited. Connect the motor wires correctly.
			2) BRK + and BRK- terminals of motor connector X105 Ground fault.	2) Check the insulation resistance between BRK + and BRK- of motor connector X105 and the ground wire. If insulation failure has occurred, replace the driver module.
			3) BRK + and BRK- terminals of motor connector X105 Contact failure occurred.	3) Remove the BRK + and BRK- terminals of motor connector X105. Check and if it is loose or missing, fix it securely.
			4) Failure of driver module. (Failure of mechanical brake output circuit.)	4) Replace the driver module.
21	0	Encoder communication disconnection error protection	In the driver module, the data received from the 1st encoder for each axis was interrupted a certain number of times.	Check if the 1st encoder connector X9 is connected correctly. • Correctly wire the 1st encoder cable. • Correct the connection error of the connector pin. • To take measures against noise, take the same measures as Err21.1 and Err23.0. • Replace the motor (failure of the encoder).
	1	Encoder communication error protection	The driver module received the data received from the 1st encoder of each axis, but an error was detected by the format check. Data error mainly due to noise. The 1st encoder line is connected but the received data is error.	• Secure the power supply for the encoder of 5 VDC ±5% (4.75 to 5.25 V) ... pay an attention especially when the encoder cables are long. • Separate the encoder cable and the motor cable if they are bound together. • Connect the shield to FG. • Replace the motor (failure of the encoder).
23	0	Encoder communication data error protection	The driver module received the data received from the 1st encoder of each axis and the format check was normal, but an error was detected in the content of the received data. Data error mainly due to noise	• Secure the power supply for the encoder of 5 VDC ±5% (4.75 to 5.25 V) ... pay an attention especially when the encoder cables are long. • Separate the encoder cable and the motor cable if they are bound together. • Connect the shield to FG. • Replace the motor (failure of the encoder).

(To be continued)

Error No.		Protective function	Causes	Measures
Main	Sub			
24	0	Position deviation excess protection	In the driver module, the position deviation pulse of each axis exceeds the setting of Pr 0.14 “Position deviation excess setup”.	Remove the cause of excessive position deviation. Alternatively, the positional deviation excess determination threshold value is increased.
			1) The motor movement has not followed the command.	1) Check that the motor follows to the position command pulses. Check that the output toque has not saturated in torque monitor. Make a gain adjustment. Set up maximum value to Pr 0.13 and Pr 5.22. Make a encoder wiring as per the wiring diagram. Set up the longer acceleration/deceleration time. Lower the load and speed.
			2) Setup value of Pr 0.14 “Position deviation excess setup) is small”.	2) Set up a larger value to Pr 0.14.
	1	Speed deviation excess protection	In the driver module, the difference between the internal positional command speed and actual speed (speed deviation) exceeds the setup vale of Pr 6.02 ”Speed deviation excess setup”. Note If the internal positional command speed is forcibly set to 0 due to instantaneous stop caused by the positive/negative over-travel inhibit input, the speed deviation rapidly increases at this moment. Pr 6.02 setup value should have sufficient margin because the speed deviation also largely increases on the rising edge of the internal positional command speed.	Remove the cause of excessive speed deviation. Alternatively, the speed deviation excess determination threshold is increased. • Increase the setup value of Pr 6.02. • Lengthen the acceleration/deceleration time of internal positional command speed, or improve the follow-up characteristic by adjusting the gain. • Disable the excess speed deviation detection (Pr 6.02 = 0).
25	0	Hybrid deviation excess error protection	In the driver module, the load position of the external scale and the motor position of the encoder on the full-closed control axis deviated by more than the number of pulses set in Pr 3.28 “Hybrid deviation excess setup”.	• Check the connection between the motor and the load. • Check the connection between the external scale and the driver module. • Check that the variation of the motor position (encoder feedback value) and the load position (external scale feedback value) is the same sign when you move the load. Check that the numerator and denominator of the external scale division (Pr 3.24 and 3.25) and reversal of external scale direction (Pr 3.26) are correctly set.
26	0	Over-speed protection	In the driver module, each motor rotational speed has exceeded the setup value of Pr 5.13 ” Over-speed level setup”.	Reduce motor speed. • Do not give an excessive speed command. • Check the electronic gear ratio. • Make a gain adjustment when an overshoot has occurred due to a poor gain adjustment. • To take measures against noise for the 1st encoder communication, the same measures as Er21.1 and Err23.0 are taken.
	1	2nd over-speed protection	In the driver module, each motor rotational speed has exceeded the setup value of Pr 6.15 ” 2nd over-speed level setup”.	

(To be continued)

Error No.		Protective function	Causes	Measures
Main	Sub			
27	1	Absolute clear protection	In the driver module, Multi-turn clear of absolute encoder of each axis was made from PANATERM for Multi(USB communication, EoE communication).	• Check if multi-turn clear of absolute encoder has been made through PANATERM for Multi(USB communication, EoE communication). Note This is a safety measure against a change in the absolute position information of the 1st encoder, and it is not error for this alarm to occur.
	4	Position command error protection	In the driver module, position command variation (value after electronic gear) of each axis exceeds the specified value.	• Check if the variation of the position command is large due to operations such as cyclic position control (csp). • Check electronic gear ratio. Note After Err27.4 occurs in incremental mode, the home position return is not completed, so perform the home position return after clearing the alarm.
	6	Operation command contention protection	• In the driver module, when Pr7.99 bit0 of each axis is set to 0, EtherCAT communications was established during test run or FFT operating. • In the driver module, when Pr7.99 bit0 of each axis is set to 1, servo ON command by EtherCAT communications received during test run or FFT operating.	• Check that EtherCAT has not been established during test run or FFT when Pr7.99 bit0=0 is set. • Check that servo ON command by EtherCAT communication has not been sent from the host controller during test run or FFT when Pr7.99 bit0=1 is set.
	7	Position information initialization error protection	In the driver module, perform return to origin for each axis in hm mode, then return to origin has been canceled by halt from the host device between origin detection and return to origin completion.	Check if homing command is canceled near the home position signal.
29	1	Counter overflow protection 1	In the driver module, in each axis absolute mode, in the position information initialization process at the following timings, the calculation value (the absolute encoder (or the absolute external scale) position information [pulse] / electronic gear ratio) exceeded 32bit width or the denominator or numerator exceeded the unsigned 64-bit size in the calculation process. • When the control power is ON. • EtherCAT communication is established (Init -> PreOp). • Returning to origin is completed. • The absolute multi-turn data is cleared from PANATERM for Multi or EtherCAT communication. • PANATERM for Multi operation (test run, frequency characteristic analysis, Z phase search, fit gain) is completed. • pin assign is executed by PANATERM for Multi.	Check the operation range at the position of absolute encoder (absolute scale) and electronic gear ratio.
	2	Counter overflow protection 2	Position deviation (pulse unit) became $\pm(2^{30}-1)=\pm1073741823$ or more. Or the position deviation (command unit) exceeds $\pm2^{30}=1073741824$.	• Check that the motor runs as per the position command pulses. • Check that the output toque has not saturated in torque monitor. • Make a gain adjustment. • Set up maximum value to torque limit setting. • Make a wiring connection of the encoder as per the wiring diagram.

(To be continued)

Error No.		Protective function	Causes	Measures
Main	Sub			
31	3	Safety function error protection 3	A communication error with the safety part was detected inside the driver module.	In case of the repeated occurrence, because failure is possible, replace the driver module. Return to a dealer for investigation (repair).
	5	Safety function error protection 5	The safety part of the driver module detected an alarm (Fatal).	
33	0	Duplicated input allocation error 1 protection	Input signals (SI1, SI2, SI3, SI4) are assigned with two functions. [Duplicate setting] • allocated multiple input signals into one function of one axis • Both SI-MON1 and EXT1, SI-MON2 and EXT2, SI-MON5 and E-STOP functions are allocated to input signals. • Functions that can be used in multiple control modes are assigned to different input signals.	Set the function assignment (Pr4.00 to Pr4.07) to the input signal correctly.
	1	Duplicated input allocation error 2 protection	Input signals (SI5, SI6, SI7, SI8) are assigned with two functions.	
	2	Input function number error 1 protection	Input signals (SI1, SI2, SI3, SI4) are assigned with undefined number. Or, logical setup is not correct. [Logic setting error] • Functions that can be used in multiple control modes are assigned to input signals with different logic • A-CLR was assigned to the input signal with b connection. • Not assigned to all control modes when using DB-SEL.	
	3	Input function number error 2 protection	Input signals (SI5, SI6, SI7, SI8) are assigned with undefined number. Or, logical setup is not correct.	
	4	Output function number error 1 protection	Output signals (SO1) are assigned with undefined number. Or, when using BRK-OFF / set brake / CMP-OUT output, it is not assigned to all control modes.	Set the function assignment (Pr4.10 to Pr4.11) to the output signal correctly.
	5	Output function number error 2 protection	Output signals (SO2, SO3) are assigned with undefined number. Or, when using BRK-OFF / set brake / CMP-OUT output, it is not assigned to all control modes.	
	8	Latch input allocation error	Error has occurred during function assignment of latch correction pins (Axis A: SI5, SI6, SI7, Axis B: SI1, SI2, SI3). • Allocate EXT1 to SI5, EXT2 to SI6, and EXT3 to SI7 for Axis A, EXT1 to SI1, EXT2 to SI2, and EXT3 to a pin other than SI3 for Axis B. • Allocate HOME to SI6 or SI7, POT to SI5 or SI7, and NOT to SI5 or SI6 for Axis A. Allocate HOME to SI2 or SI3, POT to SI1 or SI3, and NOT to SI1 or SI2 for Axis B. • Not allocated to all control modes.	Set the function assignment (Pr4.00 to Pr4.07) to the latch input signal correctly.

(To be continued)

Error No.		Protective function	Causes	Measures
Main	Sub			
34	0	Software limit protection	In the driver module, when a position command within the specified input range of each axis is given, the motor operates outside its working range specified in Pr 5.14 (Motor working range setup).	Improves followability to the position command. Alternatively, the motor movable range setting range is expanded.
			1) Gain is not appropriate.	1) Check the gain (balance between position loop gain and velocity loop gain) and inertia ratio.
			2) Pr 5.14 setup value is low.	2) Increase the setup value of Pr 5.14. Or, Set Pr 5.14 to 0 to disable the protective function.
	1	One revolution absolute working range error	In the driver module, at the time of absolute encoder is used to each axis, When Pr0.15 (Absolute encoder setup)=3, the motor (encoder) position or command position crossed motor working range (encoder 1 revolution data).	• Check the working range of an absolute encoder (absolute scale) position including 607Ch/687Ch (Home offset). • Reconsider electronic gear ratio. • A motor (encoder) position is returned in motor working range (inside of encoder 1 revolution data). • A command position is returned in motor working range (inside of encoder 1 revolution data).
36	0	EEPROM parameter error protection	In the driver module, data in parameter storage area had been damaged when reading the data from EEPROM of each axis at power-on.	• Set up all parameters again and save them in EEPROM again. • If the error persists, replace the driver module (it may be a failure.) • Return the product to the dealer or manufacturer.
	1			
37	0	EEPROM check code error protection	In the driver module, data for writing confirmation to EEPROM had been damaged when reading the data from EEPROM of each axis at power-on.	• Replace the driver module. (it may be a failure). • Return the product to the dealer or manufacturer.
	1			
	2			

(To be continued)

Error No.		Protective function	Causes	Measures
Main	Sub			

38	0	Over-travel inhibit input protection 1	• In the driver module, when Pr 5.04 “over-travel inhibit input setup” = 0 for each axis, both positive and negative over-travel inhibit inputs (POT/NOT) have been ON.
			• In the driver module, when Pr 5.04 = 2 for each axis, positive or negative over-travel inhibit input has turned ON.
			• In the driver module, when Pr 5.04 = 3 for each axis, the following operation was performed. (Note 1)
			  • over-travel inhibit input (POT/NOT) towards operating direction has been ON
			  • both positive and negative over-travel inhibit inputs (POT/NOT) have been ON
			  • or a position command towards inhibited direction has been given after the alarm clear.
				• Check that there are not any errors in switches, wires or power supply which are connected to positive direction/ negative direction over-travel inhibit input (POT/NOT). In particular, check whether the rising time of drive inhibit signal power (DC12 to 24V) to supply servo control I / O connector X4 of the driver module is not slow.
				• Check that the status of over-travel inhibit input and the direction of a position command.

	1	Over-travel inhibit input protection 2	In the driver module, when Pr5.04 “Over-travel inhibit input setup” of each axis is set to 0 or 1, the following situation occurred when EtherCAT communication is OFF(Init). • an operation command (e.g. test run, FFT) has been received through USB communication (PANATERM for Multi) while EtherCAT communication is OFF and either POT or NOT is ON. • POT or NOT was turned ON while the system is operating according to the command given through USB communication. NOTE: Err38.1 is not occurred regardless of POT/NOT status when Pr7.116 bit0=1 (It is parameter to enable operation command by PANATERM for Multi when EtherCAT communication is established.) and EtherCAT communication is established, even if operation command by PANATERM for Multi is used.	Check that there are not any errors in switches, wires or power supply which are connected to positive direction/ negative direction over-travel inhibit input. In particular, check whether the rising time of drive inhibit signal power (DC12 to 24V) to supply servo control I / O connector X4 of the driver module is not slow.
	2	Over-travel inhibit input protection 3	• In the driver module, When positive over-travel inhibit inputs (POT) of A-Axis is assigned to SI6 or negative over-travel inhibit inputs (NOT) of A-Axis is assigned to SI7, Pr 5.04 “Over-travel inhibit input setup” was set to a value other than 1 (CoE side deceleration stop). • In the driver module, when positive over-travel inhibit inputs (POT) of B-Axis is assigned to SI2 or negative over-travel inhibit inputs (NOT) of B-Axis is assigned to SI3, Pr 5.04 “Over-travel inhibit input setup” was set to other than 1 (CoE side deceleration stop).	• When using each axis POT / NOT with the assignment shown on the left, check that Pr5.04 “Over-travel inhibit input setup” is set to 1 (CoE side deceleration stop). • When POT is allocated to SI6 or NOT allocated to SI7, make sure that Pr 5.04 "Over-travel inhibit input setup" is set to 1 (CoE side deceleration stop).
40	0	Absolute system down error protection	In the driver module, when Pr0.15 “Absolute encoder setup” for each axis is set to 0, 2, 6, the power supply voltage to the 1st encoder or the battery power supply voltage drop, and then the capacitor voltage built in the encoder was below the specified value.	After connecting the power supply for the battery, clear the absolute encoder. ▶ Note The alarm of driver module cannot be cleared until the absolute encoder is reset.
41	0	Absolute counter over error protection	In the driver module, when Pr0.15 “Absolute encoder setup” = 0, 6 for each axis, the multi-turn counter of the 1st encoder exceeded the specified value.	• Set Pr 0.15 Absolute encoder setup to the appropriate value. • Limit the travel from the machine origin within 32767 revolutions. • Clear the multiple rotation of absolute encoder.

(Note 1) Not supported in the first edition of the software version (Ver1.01)..

(To be continued)

Error No. Main	Error No. Sub	Protective function	Causes	Measures
42	0	Absolute over-speed error protection	In the driver module, the following situation occurred when Pr0.15 “Absolute encoder setting” = 0, 2, 6 for each axis.	Prevent the motor from moving at high speed in the battery backup state. It was shut off and the motor speed exceeded the specified value.
			1) The motor speed of the 1st encoder of each axis is reduced when only the battery power is supplied in the event of a power failure while the driver module control power is OFF. The specified value was exceeded.	1) Check if there is any external drive during a power failure and the motor speed at that time, and operate so as to be less than the specified value.
			2) After turning on the driver module control power, the 1st encoder power was OFF during normal operation, and the rotation speed exceeded the specified value.	2) Do not switch to power failure mode during normal operation. Check the power supply voltage (5V ± 5%) on the encoder side. Check the connection status of the 1st encoder connector X9.
			Note This does not occur with a batteryless absolute encoder.	Note The alarm of driver module cannot be cleared until the absolute encoder is reset..
44	0	Absolute single turn counter error protection	In the driver module, single turn counter error of each axis 1st encoder has been detected.	Replace the motor.
45	0	Absolute multi-turn counter error protection	In the driver module, multi turn counter error of each axis 1st encoder has been detected.	Replace the motor.
47	0	Absolute status error protection	When the driver module control power was power on, each axis 1st encoder has been running at faster speed than the specified value.	Arrange so as the motor does not run at power-on.
50	0	External scale connection error protection	Communication between the external scale and the driver module has been interrupted in certain times, and disconnection detecting function has been triggered.	Make a wiring connection of the external scale as per the wiring diagram. Correct the miswiring of the connector pins.
	1	External scale communication error protection	The driver module received communication data from the 2nd encoder of each axis (external scale, etc.), but an error was detected by the format check. The data error mainly due to noise. The 2nd encoder line is connected but the communication data had some error.	• Secure the power supply for the 2nd encoder (the external scale) of 5 VDC ±5% (4.75 to 5.25 V) ... pay attention especially when the external scale cables are long. • Separate the external scale cable and the motor cable if they are bound together. • Connect the shield to FG...refer to wiring diagram of external scale in "REFERENCE SPECIFICATIONS Driver module section (SX-DSV03454)". • Replace the external scale.
	2	External scale communication data error protection	The driver module received communication data from the 2nd encoder of each axis (external scale, etc.), and the format check was not error, but an error was detected in the contents of the communication data. The data error mainly due to noise.	
51	0	External scale status error protection 0	In the driver module, Bit 0 of each axis 2nd encoder (external scale, etc.) error code (ALMC) has been turned to 1.	Check the external scale specifications, and after removing the cause of the error, clear the 2nd encoder (external scale, etc.) error. And then, shut off the power to reset.
	1	External scale status error protection 1	In the driver module, Bit 1 of each axis 2nd encoder (external scale, etc.) error code (ALMC) has been turned to 1.	
	2	External scale status error protection 2	In the driver module, Bit 2 of each axis 2nd encoder (external scale, etc.) error code (ALMC) has been turned to 1.	
	3	External scale status error protection 3	In the driver module, Bit 3 of each axis 2nd encoder (external scale, etc.) error code (ALMC) has been turned to 1.	
	4	External scale status error protection 4	In the driver module, Bit 4 of each axis 2nd encoder (external scale, etc.) error code (ALMC) has been turned to 1.	
	5	External scale status error protection 5	In the driver module, Bit 5 of each axis 2nd encoder (external scale, etc.) error code (ALMC) has been turned to 1.	

(To be continued)

Error No.		Protective function	Causes	Measures
Main	Sub			
55	0	A-phase connection error protection	In the driver module, A-phase connection in 2nd encoder for each axis (A/B/Z external scale) is defective, e.g. discontinued.	• In the driver module, check the A-phase connection of 2nd encoder for each axis (A/B/Z external scale). • Replace the external scale.
	1	B-phase connection error protection	In the driver module, B-phase connection in 2nd encoder for each axis (A/B/Z external scale) is defective, e.g. discontinued.	• In the driver module, check the B-phase connection of 2nd encoder for each axis (A/B/Z external scale). • Replace the external scale.
	2	Z-phase connection error protection	In the driver module, Z-phase connection in 2nd encoder for each axis (A/B/Z external scale) is defective, e.g. discontinued.	• In the driver module, check the Z-phase connection of 2nd encoder for each axis (A/B/Z external scale). • Replace the external scale.

(To be continued)

Error No.		Protective function	Causes	Measures
Main	Sub			
69	0	Inter-modules communication timeout error protection	• The power supply module detected a disconnection of Inter-modules communication or an error in received data. →Err69.0 occurs in all driver modules connected to the power supply module. • The driver module detected a disconnection of Inter-modules communication or an error in received data. →Err69.0 occurs in the driver module that detected the error.	• Check that the power supply module communication cable is connected properly. • Check that the DIP switches for power supply module communication ID setup on the front panel of the driver module is set correctly. • Take measures against noise, such as properly grounding the power supply module and driver module, inserting a noise filter or surge absorber in the power supply line, and installing a signal noise filter on each cable, input/output line, and power line connected to the driver module. • Replace the driver module. • Replace the power supply module.
	1	Inter-modules communication CRC error protection	• With the power supply module, Inter-modules communication could be received, but CRC error was detected. →Err69.1 occurs in all the driver modules connected to the power supply module. • In the driver module, Inter-modules communication could be received, but CRC check did not match. →Err69.1 occurs on the driver module that detected the error.	
	2	Power supply module error protection 1	An error that does not need to be handled with immediate stop was detected in the power supply module. (Main power supply overvoltage, main power supply phase lack, regeneration error, main power supply overload (Note 1) etc.) →Err69.2 occurs in all driver modules connected to the power supply module.	• Check the detail information on power supply failure on PANATERM for Multi, and remove the cause of the error referring to "11.5 Protective functions" / warning action of the power supply module and turn on the control power supply again. • Replace the power supply module.
	3	Power supply module error protection 2	An error that needs to be handled with immediate stop was detected in the power supply module. (Regenerative overload, overheating, etc.) →Err69.3 occurs in all driver modules connected to the power supply module.	
	4	Power supply module error protection 3	With the power supply module, control power supply undervoltage or EEPROM error was detected. →Err69.4 occurs in all driver modules connected to the power supply module.	
	5	Inter-modules communication ID setting error protection	• With the power supply module, the driver module that the inter-module communication node address is 1 could not be found in the connected module confirmation section after the control power was turned on. →Err69.5 occurs in all driver modules connected to the power supply module. • In the driver module, the inter-module communication node address on the front panel was set to 0 when the control power was turned on. →Err69.5 occurs on the driver module that detected the error.	• Check that the DIP switches for power supply module communication ID setup on the front panel of the driver module is set correctly. • Replace the power supply module.
	6	Excess number of driver module connection error protection	With the power supply module, detected more than maximum number of connections driver modules were connected in the connected number confirmation section after the control power was turned on. →Err69.6 occurs in all driver modules connected to the power supply module.	Reduce the number of driver modules connected to one power supply module to the maximum number of connected modules. ▼ Refer to For maximum number of connections, refer to "REFERENCE SPECIFICATIONS Power supply module section (SX-DSV03452)".

(Note 1) Supported in a software version of function extended edition 1 or later.

(To be continued)

Error No.		Protective function	Causes	Measures
Main	Sub			
70	0	U-phase current detector error protection	In the driver module, each axis motor U-phase current detection offset value has some error.	• Turn off power once, and turn on again. • Even so, if an error indication appears and an error occurs, failure is possible. Discontinue the use and replace the motor and driver module. Return to a dealer for investigation (repair).
	1	W-phase current detector error protection	In the driver module, each axis motor W-phase current detection offset value has some error.	
72	0	Thermal error protection	Thermal has some error.	
80	0	ESM unauthorized request error protection	In the EtherCAT communication of the driver module, the change state request which cannot change from the present state was received. Init to SafeOP Init to OP PreOP to OP OP to Bootstrap PreOP to Bootstrap SafeOP to Bootstrap	Check the change state request of host controller.
	1	ESM undefined request error protection	In the EtherCAT communication of the driver module, the change state request which does not have a definition (except the following) was received. 1 : Request Init State 2 : Request Pre-Operational State 3 : Request Bootstrap State 4 : Request Safe-Operational State 8 : Request Operational State	Check the change state request of host controller.
	2	Bootstrap requests error protection	In the EtherCAT communication of the driver module, the following change state request was received. 3 : Request Bootstrap State	Check the change state request of host controller.
	3	Incomplete PLL error protection	In the EtherCAT communication of the driver module, phasing servo and communication (PLL lock) could not be completed even after the lapse of 1s after the start of the synchronization process.	<In case of DC> • Check setting of DC mode. • It is checked whether propagation delay compensation or drift compensation is correct. <In case of SM2> • It is checked whether the transmitting timing of PDO from host controller is constant. • Check whether there is any problem in wiring of the EtherCAT communication cable. • Check whether there is excessive noise on the EtherCAT communication cable.
	4	PDO watchdog error protection	In the EtherCAT communication of the driver module, during PDO communication (SafeOP or OP state), bit10 of AL Event Request(0220h) did not turn on within the time is set ESC register addresses 0400h and 0420h.	• Check whether the transmitting timing of PDO from host controller is constant (not stop). • Increase the timeout value of the PDO watchdog detection. • Check whether there is any problem in wiring of the EtherCAT communication cable. • Check whether there is excessive noise on the EtherCAT communication cable.

(To be continued)

Error No.		Protective function	Causes	Measures
Main	Sub			
80	6	PLL error protection	In the EtherCAT communication of the driver module, in the ESM state is SafeOP or OP, phasing servo and communication (PLL lock) was separated.	<In case of DC> • Check setting of DC mode. • Check whether propagation delay compensation or drift compensation is correct. <In case of SM2> • Check whether the transmitting timing of PDO from host controller is constant. • Check whether there is any problem in wiring of the EtherCAT communication cable. • Check whether there is excessive noise on the EtherCAT communication cable. If the error cannot be resolved, shut off and reset the control power.
	7	Synchronization signal error protection	In the EtherCAT communication of the driver module, more than the threshold value that the omission of the interruption processing by SYNC0 or IRQ set up by bit0 to 3 of Pr7.42 (Maximum continuation communication error) in after the completion of synchronous processing generated.	<In case of DC> • Check setting of DC mode. • Check whether propagation delay compensation or drift compensation is correct. <In case of SM2> • Check whether the transmitting timing of PDO from host controller is constant. • Check whether there is any problem in wiring of the EtherCAT communication cable. • Check whether there is excessive noise on the EtherCAT communication cable. • The preset value of Pr7.42 (Maximum continuation communication error) bit0-3 is enlarged. If the error cannot be resolved, shut off and reset the control power.

(To be continued)

Error No.		Protective function	Causes	Measures
Main	Sub			
81	0	Synchronization cycle error protection	In the EtherCAT communication of the driver module, it is set to an unsupported synchronization cycle (SYNC0 cycle or an IRQ cycle). • It sets except 125000, 250000, 500000, 1000000, 2000000, and 4000000 [ns] to ESC register 09A0h (SYNC0 Cycle Time) and object 1C32h-02h (Cycle time). • The setting of ESC register and object is not in agreement.	Please set up a synchronous period correctly.
	1	Mailbox error protection	In the EtherCAT communication of the driver module, Mailbox SyncManager 0/1 setting is incorrect. • Physical Start Address: ESC register (0800h, 0801h/0808h, 0809h) setup of SyncManager0/1 is incorrect. - The area for reception of Mailbox overlaps the area for transmission. - The area for transmission/reception of Mailbox overlaps the area for transmission/reception of SyncManager2/3 - Address specification of the area for transmission/reception of Mailbox is odd number. • Length: ESC register (0802h,0803h/080Ah, 080Bh) setup of SyncManager0/1 is incorrect. - SyncManager0: Less than 32 byte - SyncManager1: Less than 32 byte • Control Register: ESC register (0804h/080Ch) setup of SyncManager0/1 is incorrect. - Other than 0110b is set for 0804h: bit3-0. - Other than 0010b is set for 080Ch: bit3-0.	Please set up Sync manager correctly..
	4	PDO watchdog error protection	In the EtherCAT communication of the driver module, a setup of the PDO watchdog timer is incorrect. • Although PDO watchdog trigger is effective (SyncManager: bit6 of the register 0804h is set to 1), the detection timeout value of PDO watchdog timer cycle setup (registers 0400h and 0420h) was set to the "communication cycle multiply 2" when DC and SM2 mode, or was set to less than 2 ms when FreeRun mode.	Set up detection timeout value of watchdog timer correctly.

(To be continued)

Error No.		Protective function	Causes	Measures
Main	Sub			
81	5	DC error protection	In the EtherCAT communication of the driver module, DC setting setup is incorrect. • A value other than the following was set to bit 2-0 of 0981h (Activation) of the ESC register: bit 2-0 = 000b bit 2-0 = 011b	Check setting of DC mode.
	6	SM event mode error protection	In the EtherCAT communication of the driver module, SM event mode which is not supported was set up. • It was set to 1C32h-01h (Sync mode) at values other than 00h(FreeRun), 01h(SM2), and 02h (DC SYNC0). • A value other than 00h (FreeRun), 02h (DC SYNC0), or 22h (SM2) was set to 1C33h-01h (Sync mode). • 000b was set to bit 2-0 of 0981h of the ESC register and SM2 was set to only either 1C32h-01h or 1C33h-01h.	• 1C32h-01h (Sync mode) should set up 00h(FreeRun), 01h(SM2), or 02h (DC SYNC0). • 1C33h-01h (Sync mode) should set up 00h (FreeRun), 02h (DC SYNC0), or 22h (SM2). • The setting of 1C32h-01h should be equal to that of 1C33h-01h.
	7	SyncManager2/3 error protection	In the EtherCAT communication of the driver module, a setup of SyncManager2/3 was set to the incorrect value. • Physical Start Address (ESC register 0810h) setting of SyncManager2 is incorrect. - The area for reception overlaps the area for transmission. - The area for transmission/reception of Mailbox overlaps the area for transmission/reception of SyncManager2/3. - Address specification of the area for transmission/reception is odd number. - The start address is out of range. • Length (ESC register 0812h) setting of SyncManager2 is incorrect. - Different from RxPDO size. • Control Register: ESC register (0814h) setting of SyncManager2 is incorrect. - Other than 01b is set for bit3-2. • Physical Start Address (ESC register 0818h) setting of SyncManager3 is incorrect. - The area for reception overlaps the area for transmission. - The area for transmission/reception of Mailbox overlaps the area for transmission/reception of SyncManager2/3. - Address specification of the area for transmission/ reception is odd number. - The start address is out of range. • Length (ESC register 081Ah) setting of SyncManager3 is incorrect. - Different from TxPDO size. • Control Register: ESC register (081Ch) setting of SyncManager3 is incorrect. - Other than 00b is set for bit3-2.	Set up SyncManager2/3 correctly.

(To be continued)

Error No.		Protective function	Causes	Measures
Main	Sub			
84	3	Synchronous establishment initialization error protection	In the EtherCAT communication of the driver module, error occurred during initialization process of phasing communication and servo.	• Turn the power off once, then turn it on again. • If error occurred repeatedly, there is a possibility of failure. Stop using the products, and replace the motor and the driver module. • Return the products to the dealer or manufacturer.
85	0	TxPDO assignment error protection	In the EtherCAT communication of the driver module, the following incorrect TxPDO was assigned. • The data size of the TxPDO map on Axis A side was set to exceed 32 bytes. • The data size of the TxPDO map on Axis B side was set to exceed 32 bytes. • An object for Axis B was set in 1A00h to 1A03h (for Axis A). • An object for Axis A was set in 1A10h to 1A13h (for Axis B).	• Set the TxPDO data size within 32 bytes for each axis. • Set only objects for Axis A in 1A00h to 1A03h. • Set only objects for Axis B in 1A10h to 1A13h.
	1	RxPDO assignment error protection	In the EtherCAT communication of the driver module, the following incorrect RxPDO was assigned. • The data size of the RxPDO map on Axis A side was set to exceed 32 bytes. • The data size of the RxPDO map on Axis B side was set to exceed 32 bytes. • An object for Axis B was set in 1600h to 1603h (for Axis A). • An object for Axis A was set in 1610h to 1613h (for Axis B).	• Set the RxPDO data size within 32 bytes for each axis. • Set only objects for Axis A in 1600h to 1603h. • Set only objects for Axis B in 1610h to 1613h.
	2	Lost link error protection	In the EtherCAT communication of the driver module, the time set in Pr7.43 (Lost link detection time) elapsed when either Port 0 or Port 1 fell and remains in the lost link state after the ESM state transitioned from Init to PreOP (not including a port that had been in the lost link state at the time of transition from Init to PreOP).	• Check whether there is any problem in wiring of EtherCAT communication cable. • Check whether there is any problem in the communication from higher rank equipment.
	3	SII EEPROM error protection	In the EtherCAT communication of the driver module, SII (EEPROM) information and object information did not match as follows. • Vendor ID, Product code, and Revision number did not match between SII (EEPROM) and the object values. • SII (EEPROM) reading/writing is incorrect. • Any of bit 11-14 of ESC register 0502h is 1.	• Check the data of SII. • Retry reading/writing of SII.
87	0	Forced alarm input protection	Forced alarm input (E-STOP) is applied.	• Check the wiring of forced alarm input (E-STOP).
	1	Retracting operation completion (I/O) (Not supported)	The retracting operation by I/O is successfully completed.	• This is a security precaution, and there is no problem if it is an intended retracting operation. • It is an error that notifies the retracting operation execution. • Make sure that return to origin is performed after thealarm is cleared.
	2	Retracting operation completion (communication) (Not supported)	The retracting operation by communication is successfully completed.	• Check whether there is any problem in wiring of EtherCAT communication cable. • Check whether there is any problem in the communication from higher rank equipment.

(To be continued)

Error No.		Protective function	Causes	Measures
Main	Sub			
87	3	Retracting operation error (Not supported)	Retracting operation activation failed due to one of the following conditions. Otherwise, the retracting operation was suspended. • The setting for Pr6.85 “Retracting operation condition setting” is abnormal • The retracting operation is enabled and the communication cycle is less than 0.250 ms • Drive inhibit input (POT/NOT) is detected during the retracting operation • A retracting operation execution condition is satisfied although drive inhibit input (POT/NOT) has been detected • A retracting operation execution condition is satisfied during an operation not according to the communication command from the host device (such as test run) • The retracting operation was suspended in response to alarm detection during a retracting operation Retracting operation activation failed due to a servo-off state and such	• Confirm that there are no errors in parameter settings. • Confirm that there is no problem in the operating environment. • Make sure that return to origin is performed after the alarm is cleared.
88	0	Main power undervoltage protection (AC insulation detection 2)	On each axis of the driver module, the main power AC cutoff (main circuit power supply OFF) from the power supply module was detected with the following settings. • Main circuit power supply OFF was detected when the preset value of 6007h/6807h (Abort connection option code) is 1 and the PDS state is "Operation Enabled" or "Quick stop active". • Switch on command was received when the preset value of 6007h/6807h (Abort connection option code) is 1 and the PDS state is "Ready to switch on" and main circuit power supply OFF.	• The capacity rise of power supply voltage. A power supply is changed. The cause by which the magnetic contactor of the main power supply fell is removed, and a power supply is switched on again. • Each phase (L1, L2, L3) of a power supply is connected correctly. The single phase 100V and the single phase 200V should use L1 and L3. • It replaces with new power supply module.
	1	Control mode setting error protection	In the driver module, the following incorrect settings was detected for each axis. • The PDS state was changed to "Operation enabled" when 6060h/6860h (Modes of operation) was set to 0 and 6061h/6861h (Modes of operation display) was set to 0. • 6060h/6860h (Modes of operation) was set to an unsupported control mode. • 6060h/6860h (Modes of operation) was set to 3 (pv), 4 (tq), 9(csv) or 10 (cst) in full-closed control. • 6060h/6860h (Modes of operation) was set to 3 (pv), 4 (tq), 9(csv) or 10 (cst) in two-degree-of-freedom control mode (Synchronization type). • The control mode was set to two-degree-of-freedom control mode (synchronization type) in full-closed control.	• Check the preset value of 6060h/6860h (Modes of operation). • Check the parameters Pr6.47 bit0 and bit3 related to two-degree-of-freedom control mode.

(To be continued)

Error No.		Protective function	Causes	Measures
Main	Sub			
88	2	ESM requirements during operation error protection	In the EtherCAT communication of the driver module, the following incorrect combinations occurred on each axis. • When PDS state was "Operation enabled" or "Quick stop active", received the ESM state change command to other ESM states. When Pr7.99 bit0=1 is set, the command for transiting from the current ESM to other ESM state was received during servo-on (while warning D2 is occurring) on PANATERM for Multi.	• Check the state transition request from host controller.
	3	Improper operation error protection	In the driver module, the following incorrect settings was detected on each axis. • When EXT1/EXT2 is not assigned to input signal, EXT1/EXT2 was selected in trigger selection of a touch probe (60B8h/68B8h (Touch probe function)). • In the absolute mode of full-closed, Z-phase was selected in trigger selection of a touch probe (60B8h/68B8h (Touch probe function)). • When the software limit function is enabled, the actual position or the command position wrapped around. • The calculation result of electronic gear ratio was outside the range of 8000 times to 1/1000 times. • In the calculation process of electronic gear ratio, the denominator or numerator exceeded an unsigned 64-bit size. • In the final calculation result of electronic gear ratio, the denominator or numerator exceeded an unsigned 32-bit size. • When the communication cycle is set to 250 us or lower, the electronic gear ratio was set to other than 1:1. • When the communication cycle is set to 500 us, the electronic gear ratio was set to other than a power of 2. • When the synchronous mode is DC or SM2 and the communication cycle is set to 250us or less, TxPDO size for either Axis A or Axis B was set to exceed 6 bytes. • When the synchronous mode is DC or SM2 and the communication cycle is set to 500us, the electronic gear ratio was set to a power of 2 and TxPDO size for either Axis A or Axis B was set to exceed 25 bytes. • When the synchronization mode is DC or SM2 and the communication cycle is set to 250us or less, RxPDO size for either Axis A or Axis B was set to exceed 6 bytes. • When the synchronous mode is DC or SM2 and the communication cycle is set to 500us, the electronic gear ratio was set to a power of 2 and RxPDO size for either Axis A or Axis B was set to exceed 25 bytes.	• Set up the functional allotment for input signal correctly. • Set up trigger selection correctly. • Check the relation between the operation range setting and the software limit setting. • Review the electronic gear settings and turn ON the power again. • Check the communication cycle setting, electronic gear setting, and TxPDO size setting. • Check the communication cycle setting, electronic gear setting, and RxPDO size setting.

(To be continued)

Error No.		Protective function	Causes	Measures
Main	Sub			
91	1	Command error protection	The driver module detected the following command error on each axis.	
			1) The position that cannot be moved in the infinite rotation absolute mode (out of the range of Position range limit (607Bh / 687Bh)) was set as the target position.	1) When using absolute positioning under pp control or csp control in the continuous rotating absolute encoder mode, set the target position to a position inside the movable range (within the Position range limit (607Bh/687Bh)).
			2) The communication cycle was set to 0.250ms and 0.125ms in full-closed control and DC synchronous mode or SM2 synchronous mode.	2) At full-closed control, communication cycle is 0.500ms or more To.
92	0	Encoder data recovery error protection	In the driver module, the initialization process of the internal position information of the 1st encoder was not performed correctly for semi-closed control and absolute mode axes.	• Ensure that the power voltage of the 1st encoder is 5 VDC ± 5% (4.75 to 5.25 V). Pay special attention when the encoder cable is long. • If the motor cable and encoder cable are bundled together, separated them. • Connect the shield to FG.
	1	External scale data recovery error protection	In the driver module, the initialization process of the internal position information of the 2nd encoder (external scale, etc.) was not performed correctly for the axis of full-closed control and absolute mode.	• Ensure the power supply voltage DC5V ± 5% (4.75 to 5.25V) of the 2nd encoder (external scale, etc.) ... Pay special attention when the external scale connection cable is long. • If the motor cable and external scale connection cable are bundled together, separated them. • Connect the shield to FG... See the external scale connection diagram in "REFERENCE SPECIFICATIONS Driver module section (SX-DSV03454)".
	3	Multi-turn data upper-limit value disagreement error protection	In the driver module, At continuous rotating absolute encoder function, there was a disagreement between the upper-limit value of encoder multi-turn data and the upper-limit value of driver module multi-turn data.	Check the parameter setting value.
93	2	Parameter setup error protection 2	The external scale ratio during full-closed control exceeded the allowable range for each axis of the driver module.	• Check the parameter setting value. • External scale ratio must be in the range 1/40 to 125200 times.
	3	External scale connection error protection	The following 2nd encoder (external scale, etc.) related setting error was detected for each axis of the driver module during full-closed control.	
			1) The communication type of the connected external scale (serial communication model) does not match the type selected by Pr 3.23(External scale selection).	1) Set Pr3.23 according to the type of external scale connected to the 2nd encoder.
			2) Pr3.23 "External scale type selection"=3, 4 or 5 was set when Pr0.01 "Control mode selection"=6 was set.	2) Check the setting in Pr3.23 "External scale type selection" again.

(To be continued)

Error No.		Protective function	Causes	Measures
Main	Sub			
93	8	Parameter setup error protection 6	The following abnormal settings were detected for each axis of the driver module in the infinite rotation absolute mode. • The continuous rotating absolute encoder function was set to enable with other than 23bit resolution absolute encoder. • Absolute home position offset is set outside the range in continuous rotating absolute mode • The actual position is out of range in infinite rotation absolute mode or single rotation absolute mode.	Check the parameter setting value.
94	3	Home position return error protection 2	The following abnormalities were detected during return-to-origin on each axis of the driver module. • Pr7.22 "Communication function extension setting 1" Positive / negative direction drive prohibition input (POT / NOT) during return to the detected Z-phase position during return to origin using Z-phase with bit7 = 1 One of was turned ON. • The return amount to the detected Z phase position became abnormal in Home position return which used Z phase.	• Increase the distance between the Z phase and the positive/negative drive prohibition input (POT / NOT). • After confirming the safety, it's made Pr7.22 bit7(Communication function extended setup 1) =0(Invalid).
95	0-4	Motor automatic recognition error protection	The motor connected to the driver module does not match outside the applicable range.	Replace the motor which matches to the driver module.
96	2	Control unit error protection 1	An error occurred in the driver module control unit.	• Turn the power off and then on again. • Return the products to the dealer or manufacturer.
	3	Control unit error protection 2		
	4	Control unit error protection 3		
	5	Control unit error protection 4		
	6	Control unit error protection 5		
	7	Control unit error protection 6		
	8	Control unit error protection 7		
97	1	Driver module system error protection 2	A system error has occurred in the driver module due to noise or ambient temperature.	• Turn the power off and then on again. • Return the products to the dealer or manufacturer.
	2	Driver module system error protection 3		
98	2	Communication hardware error protection 2	An error occurred in the EtherCAT communication peripheral circuit of the driver module.	• Turn the power off and then on again. • If error repeats, this might be a failure. Stop using the products, and replace the motor and the driver module. • Return the products to the dealer or manufacturer.
	3	Communication hardware error protection 3		
Other No.	Other error	Other error protection	Control circuit of driver module has malfunctioned due to excess noise or other causes. Some error has occurred inside of the driver module while triggering self-diagnosis function of the driver module.	• Turn off the power once, then re-enter. • If error repeats, this might be a failure. Stop using the products, and replace the motor and the driver module. • Return the products to the dealer or manufacturer.

7.2.1 Overload protection time characteristics

Large type MDMF

■ **Overload preventive time characteristics (MDMF10, MDMF15, MDMF20, MDMF30)**

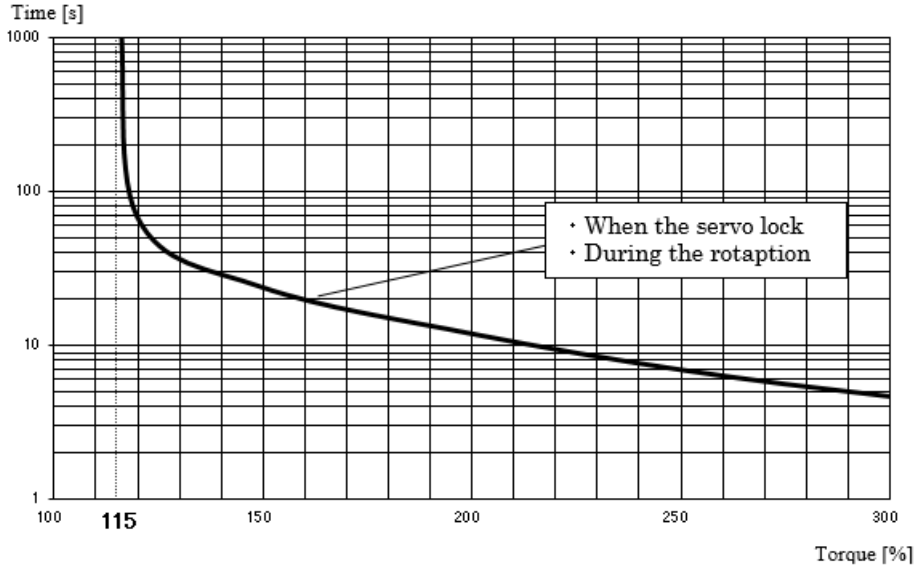

■ **Overload preventive time characteristics (MDMF40, MDMF50)**

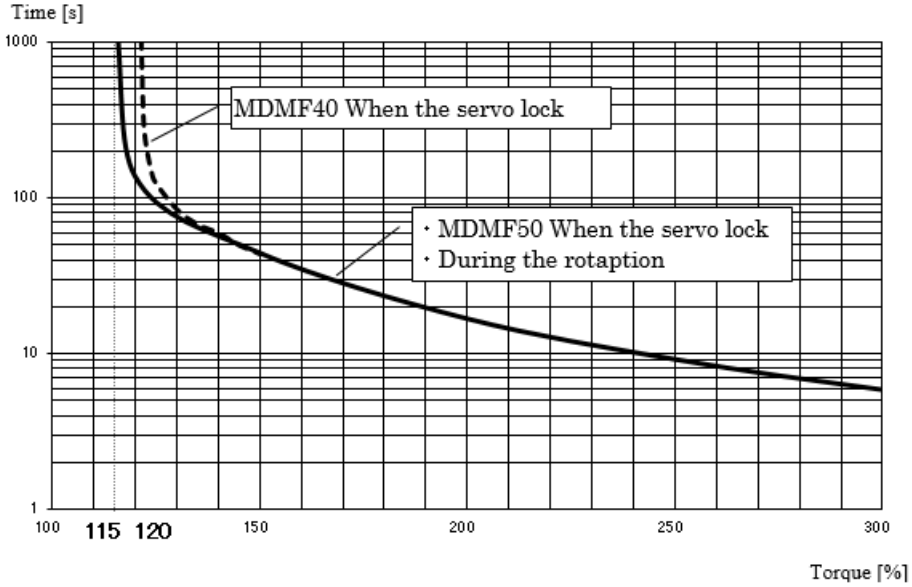

◆ **NOTE**

- **Use the motor so that actual torque stays in the continuous running range shown in S-T characteristic of each motor.**
  Check the motor specification for "S-T characteristic."

Large type MGMF

■ **Overload preventive time characteristics (MGMF09, MGMF13, MGMF18)**

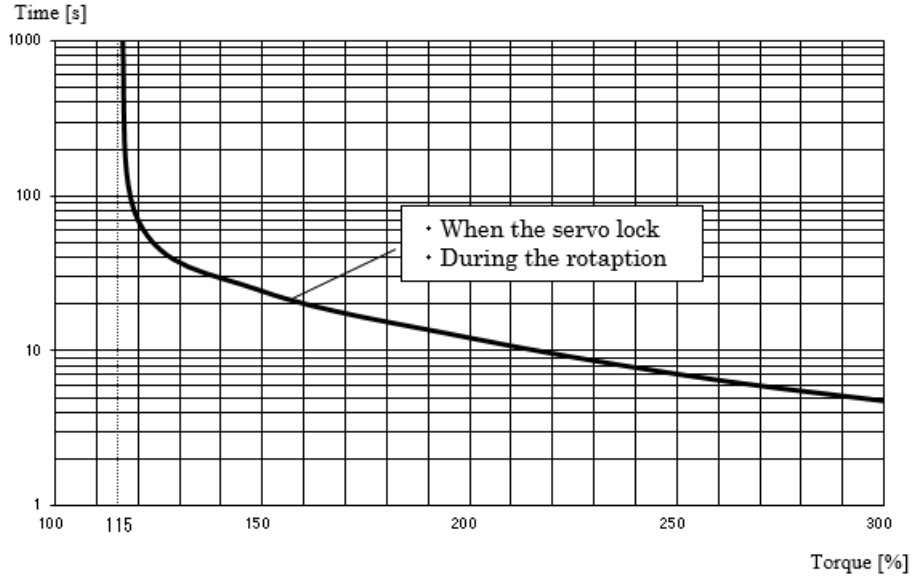

■ **Overload preventive time characteristics (MGMF29, MGMF44)**

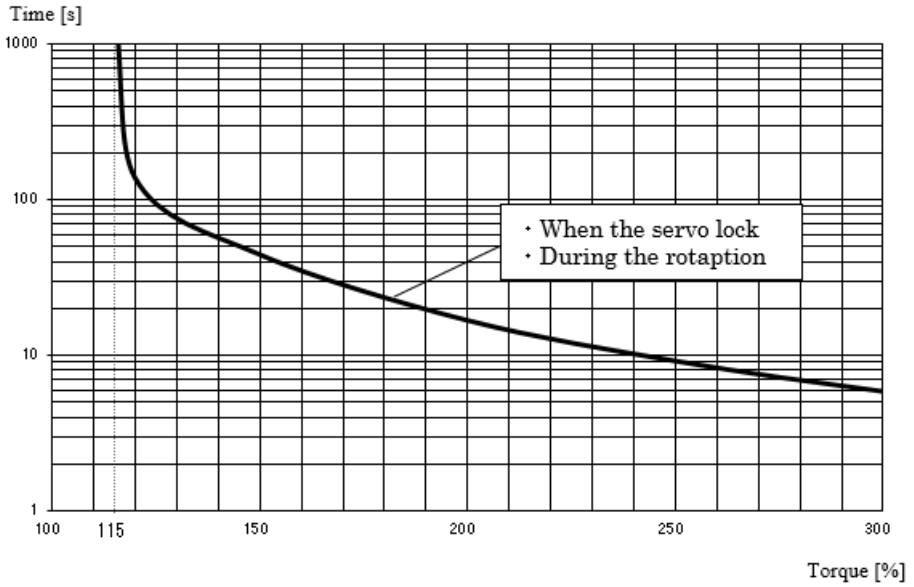

◆ **NOTE**

- **Use the motor so that actual torque stays in the continuous running range shown in S-T characteristic of each motor.**
  Check the motor specification for "S-T characteristic."

Large type MHMF

■ **Overload preventive time characteristics (MHMF10, MHMF15, MHMF20)**

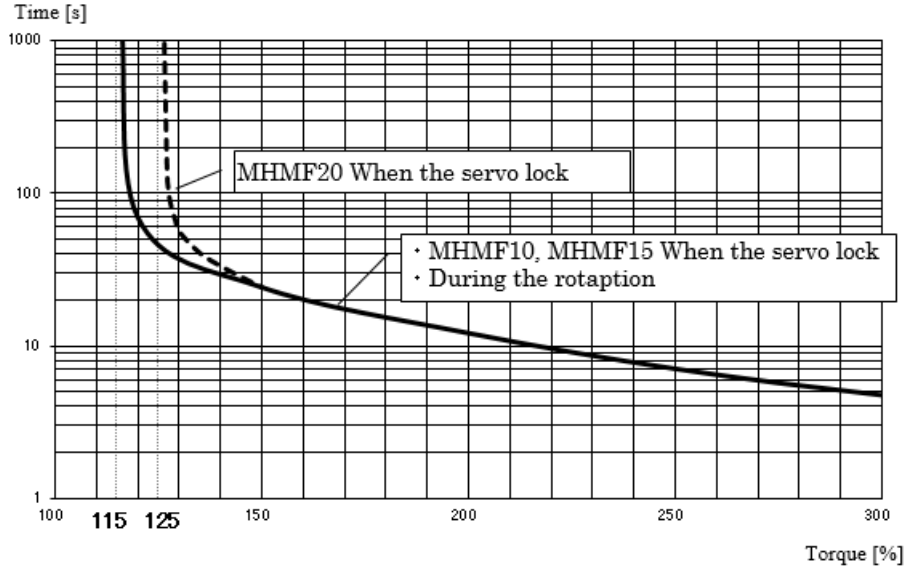

■ **Overload preventive time characteristics (MHMF30, MHMF40, MHMF50)**

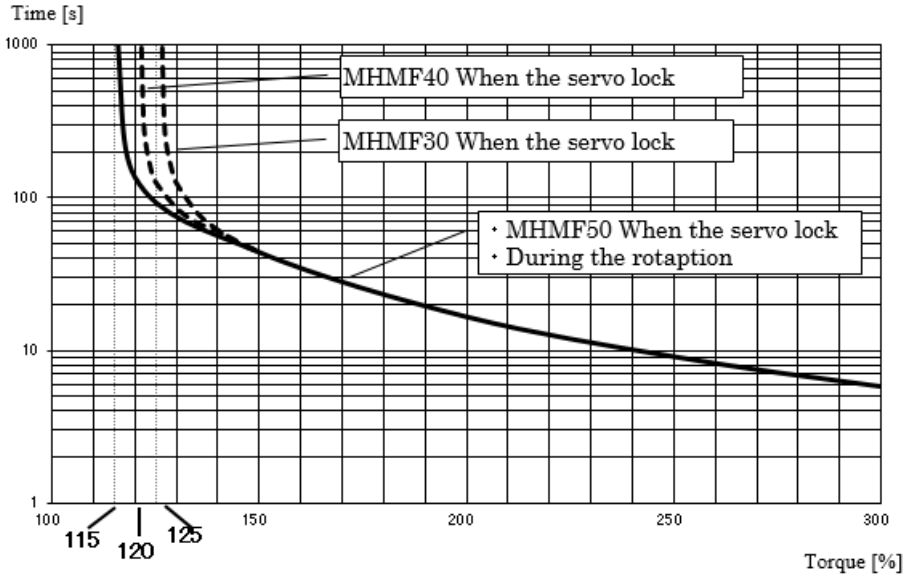

◆ NOTE

- **Use the motor so that actual torque stays in the continuous running range shown in S-T characteristic of each motor.**
  Check the motor specification for "S-T characteristic."

Large type MSMF

■ **Overload preventive time characteristics**

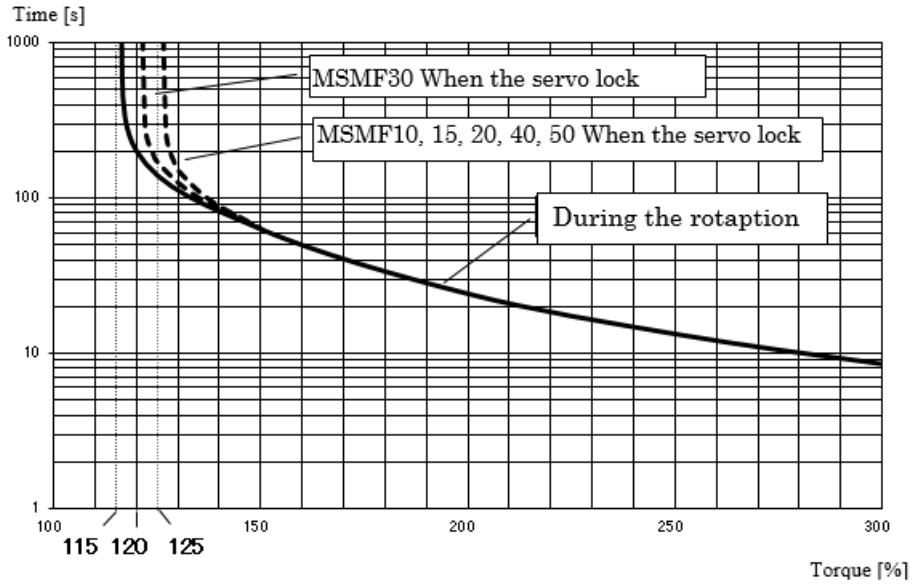

◆ **NOTE**

- **Use the motor so that actual torque stays in the continuous running range shown in S-T characteristic of each motor.**
  Check the motor specification for "S-T characteristic."

7.3 Warning function

- The warning will be triggered before the protective function is activated, and you can check the conditions such as overload beforehand.
- One of the following warning modes can be selected through the setting of Pr 6.27 Warning latch state setting: the warning non-latch mode in which the warning is automatically cleared 1 sec. after the cause of warning is removed, and the warning latch mode in which the warning is kept issued even after the cause of warning is removed. To clear the latched state, use the alarm clearing procedure described in previous alarm section.
- Note that the battery warning is latched by the encoder: after unlatching at the encoder, the warning is cleared.

Relevant parameters

■ Relevant parameters

Class	No.	Attribute	Title	Range	Unit	Function
4	40	A	Selection of alarm output 1	0 to 41 (Note 1)	-	Select the type of warning issued as the warning output 1 (WARN1). Setup value 0: ORed output of all warnings. For 1 and subsequent see the table below."Warning types"
4	41	A	Selection of alarm output 2	0 to 41 (Note 1)	-	Select the type of warning issued as the warning output 2 (WARN2) Setup value 0: ORed output of all warnings. For 1 and subsequent see the table below. "Warning types"
6	27	C	Warning latch state setup	0 to 3	-	Set the latching state of warning. General warning and extended warning can be specified. bit 0: Extended warning 0:unlatch 1:latch bit 1: General warning 0:unlatch 1:latch
6	37	B	Oscillation detecting level	0 to 1000	0.1%	Set the threshold of oscillation detection. When torque vibration beyond this setting is detected, an oscillation detection alarm is activated. If the set value is 0, this function is disabled and the alarm is not activated.
6	38	R	Alarm mask setup	-32768 to 32767	-	Set the warning detection mask. To disable detection of a warning, place 1 to the corresponding bit.
6	39	C	Alarm mask setup 2	-32768 to 32767	-	
6	95	A	Over-load warning detection level	0 to 114	%	Sets the threshold value for detecting the warning as the overload load factor increases. Sets with the overload load factor. If 0 is set, overload warning detection is performed under conventional conditions (85% of overload protection level). In addition, if other than "Pr6.96 <= Pr6.95 < (Overload protection level)" is set, overload warning detection is performed under conventional conditions (85% of overload protection level).

(Note 1) When the software version is first edition, the setting range is 0 to 40.

(To be continued)

Class	No.	Attribute (Note 1)	Title	Range	Unit	Function
6	96	A	Over-load warning release level	0 to 114	%	Sets the threshold value for releasing the warning when the load factor decreases from the state when the overload warning is occurring. Sets with the overload load factor. If 0 is set, overload warning detection is performed under conventional conditions (85% of overload protection level). In addition, if other than "Pr6.96 <= Pr6.95 < (Overload protection level)" is set, overload warning detection is performed under conventional conditions (85% of overload protection level).
6	97	B	Function expansion setup 3	-2147483648 to 2147483647	-	bit 1: Deterioration diagnosis warning function 0:Invalid 1:valid
7	14	C	Main power off warning detection time	0 to 2000	1 ms	Specifies a time to wait until a main power off warning is detected when main power shut-off continues.: 0 to 9, 2000: Warning detection is disabled. 10 to 1999: Unit is [ms]

PSM Pr.	Name	Setting range	Shipping setting	Unit	Content
03	Main power off warning detection time	0 to 2000	0	ms	Sets the main power off warning detection time. The main power off warning is not detected when the setting value is smaller than 10 or is set to 2000.
07	PSM alarm mask setting	-32768 to 32767	0	-	Set up the alarm detection mask. Placing 1 to the corresponding bit position disables detection of the alarm condition. (Note 1)

(Note 1) Supported in a software version of function expansion edition 1 or later.

Warning types

■ General warning

<table>
<tr><th rowspan="2">Warning No. (Hex.)</th><th rowspan="2">Warning</th><th rowspan="2">Content</th><th rowspan="2">Common (Note 8)</th><th>Warning latch</th><th>Output setting</th><th>Warning mask</th></tr>
<tr><th>Pr 6.27 (Note 1)</th><th>Pr 4.40/ Pr 4.41 (Note 2)</th><th>Pr 6.38/ Pr 6.39 (Note 3)</th></tr>
<tr><td>A0</td><td>Overload warning (Note 7)</td><td>The specification for warning detection varies depending on the values of Pr6.95 (Over-load warning detection level) and Pr6.96 (Over-load warning release level), and it becomes as shown in the table below.
<table>
<tr><th>Pr6.95</th><th>Pr6.96</th><th>Pr6.95/ Pr6.96 Relationship between magnitude</th><th>warning detection specification</th><th>warning release specification</th><th>Remarks</th></tr>
<tr><td rowspan="2">Other than 0</td><td rowspan="2">Other than 0</td><td>Pr6.95>= Pr6.96</td><td>Load factor is Pr6.95 or more</td><td>Load factor less than Pr6.96</td><td>Extended specification</td></tr>
<tr><td>Pr6.95< Pr6.96</td><td rowspan="3">Load factor is 85% or more of the protection level</td><td rowspan="3">Load factor is less than 85% of the protection level</td><td rowspan="2">Please do not set</td></tr>
<tr><td>0</td><td rowspan="3">-</td></tr>
<tr><td rowspan="2">0</td><td>Other than 0</td></tr>
<tr><td>0</td><td>Conventional specification</td></tr>
</table></td><td>-</td><td>✓ (Note 7)</td><td>1</td><td>Pr 6.38 bit 7</td></tr>
<tr><td>A1</td><td>PSM regeneration overload warning</td><td>Regenerative load factor exceeded 85% of protection level.</td><td>✓</td><td>✓</td><td>2</td><td>Pr 6.38 bit 5 (Note 13)</td></tr>
<tr><td>A2</td><td>Battery warning (Note 4)</td><td>Battery voltage is 3.2 V or lower.</td><td>-</td><td>Latch fixed</td><td>3</td><td>Pr 6.38 bit 0</td></tr>
<tr><td>A3</td><td>Fan warning</td><td>Fan has stopped for 1 sec.</td><td>✓</td><td>✓</td><td>4</td><td>Pr 6.38 bit 6</td></tr>
<tr><td>A4</td><td>Encoder communication warning</td><td>The number of successive encoder communication errors exceeds the specified value.</td><td>-</td><td>✓</td><td>5</td><td>Pr 6.38 bit 4</td></tr>
<tr><td>A5</td><td>Encoder overheat warning</td><td>The encoder temperature exceeds the specified value. (Note 9)</td><td>-</td><td>✓</td><td>6</td><td>Pr 6.38 bit 3</td></tr>
<tr><td>A6</td><td>Oscillation detection warning</td><td>Oscillation or vibration is detected.</td><td>-</td><td>✓</td><td>7</td><td>Pr 6.38 bit 13</td></tr>
<tr><td>A7</td><td>Lifetime detection warning</td><td>Life expectancy of capacitor or fan becomes short.</td><td>✓</td><td>Latch fixed</td><td>8</td><td>Pr 6.38 bit 2</td></tr>
<tr><td>A8</td><td>External scale error warning</td><td>The external scale detects the warning.</td><td>-</td><td>✓</td><td>9</td><td>Pr6.38 bit 8</td></tr>
<tr><td>A9</td><td>External scale communication warning</td><td>The number of successive external scale communication errors exceeds the specified value.</td><td>-</td><td>✓</td><td>10</td><td>Pr6.38 bit 10</td></tr>
<tr><td>AC</td><td>Deterioration diagnosis warning (Note 6)</td><td>Load characteristic estimates or torque command under constant speed has exceeded the set range.</td><td>-</td><td>✓</td><td>22</td><td>Pr6.39 bit7</td></tr>
<tr><td>AD</td><td>PSM fan lock warning</td><td>Fan stopping continues for 1 s (PSM)</td><td>✓</td><td>✓</td><td>23</td><td>Pr6.39 bit0 (Note 13)</td></tr>
<tr><td>AE</td><td>PSM main power supply overload warning</td><td>Main power supply load factor exceeds warning threshold. (Note 11)</td><td>✓</td><td>✓</td><td>32</td><td>Pr6.39 bit10 (Note 13)</td></tr>
<tr><td>AF</td><td>PSM rated output power overload warning</td><td>The sum of the rated output power of the DMs connected to the PSM exceeds the rated output power of the PSM. (Note 10) (Note 11) (Note 12)</td><td>✓</td><td>Latch fixed</td><td>41</td><td>Pr6.39 bit11 (Note 13)</td></tr>
</table>

Extended warning

Warning No. (Hex.)	Warning	Content	Common (Note 8)	Warning latch	Output setting	Warning mask
				Pr 6.27 (Note 1)	Pr 4.40/ Pr 4.41 (Note 2)	Pr 6.38/ Pr 6.39 (Note 3)
C3	PSM main power off warning	The main power supply stopped momentarily for more than the time set by the PSM when the PSM main power off warning detection time is set at 10 to 1999.	✓	✓	14	Pr 6.38 bit 12 (Note 13)
D2	PANATERM for Multi command execution warning (Note 7)	When bit0 of Pr7.99"Communication function Extended setup 6" is 1 and EtherCAT communication is established, the operation command (such as test run and FFT) by setup support software (PANATERM for Multi) is executed.	-	✓	30	Pr 6.39 bit 8

(Note 1) The mark circle indicates that the warning status can be maintained or cleared by the setting of Pr 6.27 "Warning latch state setup". Battery warning and lifetime detection warning will be in the lath mode only.

(Note 2) Select the warning output signal 1 (WARN 1) or warning output signal 2 (WARN 2) through Pr 4.40 "Warning output select 1" or Pr 4.41 "Warning output select 2". When the set value is 0, all warnings are ORed before being output. Do not set to any value other than those specified in the table above.

(Note 3) A waning detection can be disabled through Pr 6.38 "Warning mask setup" or Pr 6.39 "Warning mask setup 2", by setting the bit shown above to 1. Also note that bit arrangements of these masks are different from MINAS A6S series (ex. MINAS A6SE).

(Note 4) When the single-turn absolute function is enabled, a battery warning is not detected.

(Note 5) The warning can be cleared by the alarm clearing operation. If the cause of the warning is not yet removed, the warning will be detected again after clearing. When an external alarm clear (A-CLR) is in the ON state, the warning does not occur.

(Note 6) Invalidated when Pr6.97 "Function expansion setup 3" bit1 = 0.

(Note 7) Settings of Pr6.95 and Pr6.96 allow you to enable the expansion specification of overload warning detection.

- Expansion specification enabled under "Pr6.95 and Pr6.96 are other than 0" and "Pr6.96 <= Pr6.95" and "Pr6.95 < Pr5.12" In this specification, the warning latch function is invalid.

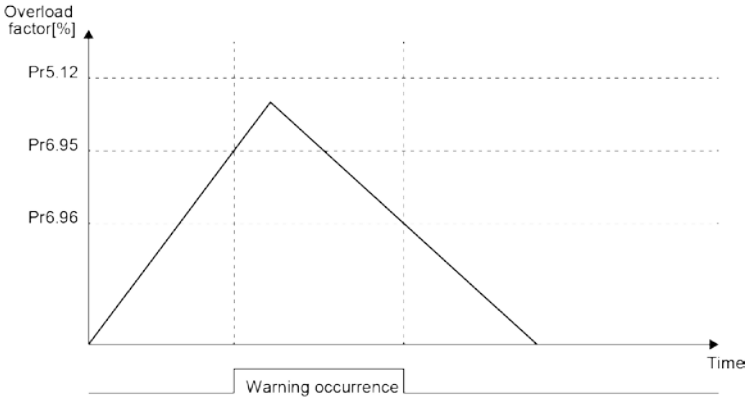

- Conventional specification enabled under conditions other than the above one.In this specification, the warning latch function depends on the Pr6.27 setting.

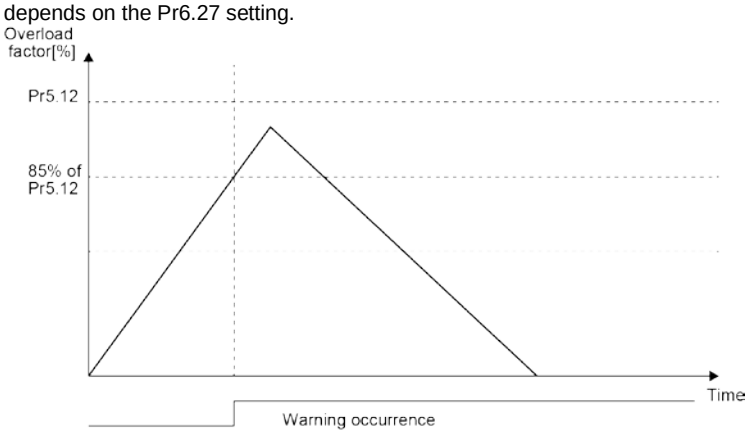

If switch to the extended specification by changing the set value of Pr 6.95 or Pr 6.96 during the overload warning with the warning latch function enabled, the overload warning may be cleared because the warning latch function become invalid.

(Note 8) Warnings with "✓" in the common column means that the cause is common to Axis A and Axis B. Specify the same setting for both Axis A and Axis B for the corresponding warning mask bits.

(Note 9) Take measures such as lowering the ambient temperature and reducing the load, or re-examining the heat dissipation.

(Note 10) About 15 seconds after the control power is turned on, detection of PSM rated output power overload is completed.

(Note 11) Supported in a software version of function expansion edition 1 or later.

(Note 12) This warning can be detected when the software version of PSM and the software version of all DMs connected to the PSM are function expansion edition 1 or later.

(Note 13) When PSM warning is masked by PSM Pr.07, DM warning corresponding to the masked PSM warning does not occur either.

7.4 Setup of gain pre-adjustment protection

Before starting gain adjustment, set the following parameters based on the conditions of use, to assure safe operation.

Setup of over-travel inhibit input

By inputting the limit sensor signal to the driver, the bumping against mechanical end can be prevented. Refer to interface specification, positive/negative direction overtravel inhibit input (POT/NOT). Set the following parameters which are related to overtravel inhibit input.

- Pr 5.04 Setup of over-travel inhibit input
- Pr 5.05 Sequence at over-travel inhibit

Setup of torque limit

By limiting motor maximum torque, damage caused by failure or disturbance such as bite of the machine and collision will be minimized. To uniformly limit maximum torque by using the parameter Pr 0.13 1st torque limit, first set Pr 5.21 Selection of torque limit to 0 or 1.

If the torque limit setup is lower than the value required during the actual application, the following two protective features will be triggered: over-speed protection when overshoot occurs, and excess positional deviation protection when response to the command delays.

By allocating the torque in-limit output (TLC) of interface specification to the output signal, torque limit condition can be detected externally.

Setup of over-speed protection

Generates Err 26.0 Over-speed protection when the motor speed is excessively high.
Default setting is the applicable motor over-speed level.
If your application operates below the motor maximum speed, set Pr 5.13 Setup of over-speed level by using the formula below.

- Pr 5.13 Setup of over-speed level = Vmax x (1.2 to 1.5)

Vmax: motor maximum speed [r/min] in operating condition
Factor in ( ) is margin to prevent frequent activation of over-speed protection.

When running the motor at a low speed during initial adjustment stage, setup the overspeed protection by multiplying the adjusting speed by a certain margin to protect the motor against possible oscillation.

Setup of the excess positional deviation protection

During the position control or full-closed control, this function detects potential excessive difference between the positional command and motor position and issues Err 24.0"Excess positional deviation protection".

Excess positional deviation level can be set to Pr 0.14 "Position deviation excess setup". The deviation can be detected through command positional deviation [pulse (command unit)] and encoder positional deviation [pulse (encoder unit)], and one of which can be selected by Pr 5.20 "Position setup unit select". (See the control block diagram.)

Because the positional deviation during normal operation depends on the operating speed and gain setting, fill the equation below based on your operating condition and input the resulting value to Pr 0.14.

■ **When Pr 5.20 = 0 (detection through command positional deviation)**

- Pr 0.14 (Setup of positional deviation excess) = Vc / Kp x (1.2 to 2.0)

Vc: maximum frequency of positional command pulse [pulse (command unit)/s]
Kp: position loop gain [1/s]

Factor in ( ) is margin to prevent frequent activation of excess positional deviation protection

■ **When Pr 5.20 = 1 (detection through encoder positional deviation and full-closed position deviational)**

- Pr 0.14 (Setup of positional deviation excess) = Ve / Kp x (1.2 to 2.0)

Ve: maximum operation frequency [pulse/s] in encoder unit or external scale unit
Kp: position loop gain [1/s]

Factor in ( ) is margin to prevent frequent activation of excess positional deviation protection

◆ **NOTE**

- **When switching position loop gain Kp, select the smallest value for calculation.**
- **When switching from the velocity control to position control, position deviation correcting function is used, which will increase calculation value and error. To cope with these problems, increase the margin.**

Setup of motor working range

During the position control or full-closed control(Not supported), this function detects the motor position which exceeds the revolutions set to Pr 5.14 Motor working range setup, and issues Err 34.0 Software limit protection.

Refer to
For details, refer to "6.2 Motor working range setup function".

Hybrid deviation excess error protection setup

At the initial operation with full-closed control, operation failure may occur due to reverse connection of external scale or wrong external scale division ratio.

To indicate this type of defect, Err25.0 “Hybrid deviation excess error protection” is issued when the deviation of motor position (encoder unit) and load position (external scale unit) exceed Pr3.28 “Hybrid deviation excess setup.”

Refer to
For details, refer to "4.5.3 Setting of hybrid deviation excess".

7.5 About the protection function setting for homing return by using the Z phase

If the following parameters are set, the driver can detect inputting of over-travel inhibition (POT, NOT) during homing return to the Z phase detection position, which is treated as the origin with the operation for homing return by the Z phase.
If inputting of over-travel inhibition is detected during the return operation, Err94.3 (returning to origin error protection 2) occurs, and the motor electricity is cut off, and it is stopped.

Pr7.22 bit7 (Communication function extended setup 1 (In Z phase homing Over-travel inhibit input setup)) =1

◆ NOTE

- **If the above value is set to the parameter and the Z phase in the vicinity of inputting of over-travel inhibition (POT/NOT) is configured as the origin, Err94.3 may be erroneously detected because overshoot occurs while returning to the Z phase detection position treated as the origin.**
  In that case, please away the Z phase of the homing completion position from inputting of over-travel inhibition (POT/NOT), homing return near inputting of over-travel inhibition (POT/NOT) so as not to occur.

Example of false detection of Err94.3	Example for preventing false detection of Err94.3
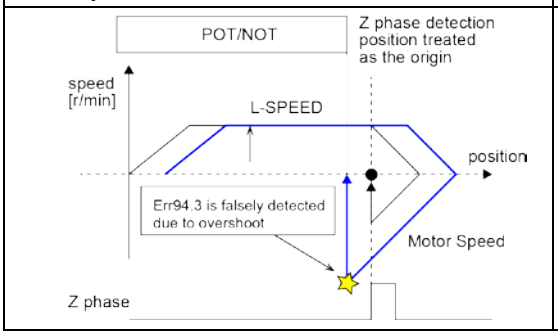	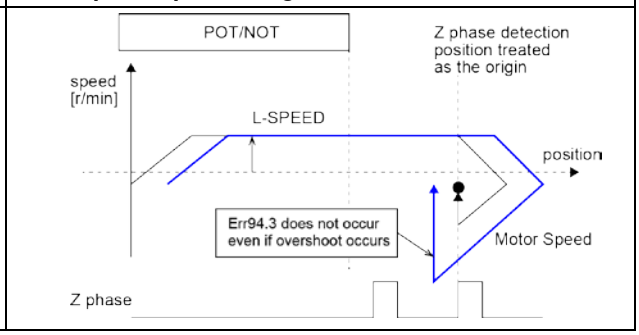

- **If the above value is not set for the parameter, detection of inputting of over-travel inhibition (POT/NOT) during returning to the Z phase detection position, which is treated as the origin when returning to the origin by the Z phase, is disabled.**

■ Relevant parameters

Class	No.	Attribute	Title	Range	Unit	Function
5	04	C	Over-travel inhibit input setup	0 to 2	-	Set up the operation of the run-inhibition (POT, NOT) inputs. Normally it should be set to 1. 0: Deceleration stop on servo (MINAS A6) side (sequence upon inputting over-travel inhibition) POT -> inhibits positive direction drive, NOT -> inhibits negative direction drive. When POT is input during positive direction driving, stops the drive according to Pr 5.05 Sequence at over-travel inhibit. The similar function NOT is applied in reverse direction. 1: CoE (CiA402) side deceleration stop POT -> inhibits positive direction drive, NOT -> inhibits negative direction drive. When POT is input during positive direction driving, or NOT is input during negative direction driving, EtherCAT profile slowdown defined in CoE(CiA402) works and stops it. The constants at the slowdown differ for every control mode. 2: Deceleration stop on servo (MINAS A6) side (sequence at alarm) POT or NOT input activates Err 38.0 Run-inhibition input protection.
7	22	R	Communication function extended setup 1	-32768 to 32767	-	bit 7: In Z phase homing Over-travel inhibit input setup 0: Invalid 1: Valid

■ Protective function

Error No.		Protective function	Causes	Measures
Main	Sub			
94	3	Home position return error2	• When Pr7.22 bit7 = 1 and Pr5.04 = 0 or 1 (Pr5.04 is ignored under pp mode), POT or NOT has become ON while return operation to detected Z phase position at homing with Z phase. • The return amount to the detected Z phase position became abnormal in Home position return which used Z phase.	• Expand the distance between Z phase and POT or NOT. • After confirming the safety, it's made bit7 of Pr7.22 (Communication function extended setup 1) =0(Invalid).

(Blank page)

8

Advanced Safety Functions

8.1 Advanced safety functions

- This driver module supports 14 types of safety functions, and can achieve up to SIL3, PLe, and Cat4* for Safety integrity level, Performance level, and Category.

  * A test pulse needs to be used to satisfy Cat4.
- Safety monitoring program can bemade by using the safety function setting software PANATERM for Safety.
- This safety monitoring program can be used to construct safety input/output, safety functions, and so forth to suit the customer’s environment.

Applicable range of functional safety

Safety functions	**Safety level** **・Safety integrity level** **・Performance level** **・Category**
14 functions STO, SBC, SS1, SS2, SSM, SSR, SLS, SOS, SLA, SAR, SLI, SDI, SLP, SCA	• SIL3, PLe, Cat4 (Note 1) (Note 2) • SIL3, PLe, Cat3 (Note 2) • SIL2, PLd, Cat3

(Note 1) A test pulse needs to be used to satisfy Cat4.

(Note 2) Encoder duplication needs to be configured in order to satisfy SIL3, PLe, and Cat4, or SIL3, PLe, and Cat3.

◆ **NOTE**

- **At the time of shipment, the safety monitoring program is enabled only the driver module (device) and the STO function with the fixed OFF state. If the advanced safety function is not required, motor drive and EtherCAT communication can be used normally as is.**
- **If the advanced safety functions is required, refer to this chapter and "PANATERM for Safety Programming Manual (SX-DSV03508)" and "Safety Installation Manual (SX-DSV03514)", create a safety monitoring program that corresponds to the customer's configuration, and write it in the driver module.**

8.2 System configuration

8.2.1 Encoder configuration

The combination of encoders corresponding to each safety function is shown below.

Connection	Configuration 1	Configuration 2	Configuration 3
	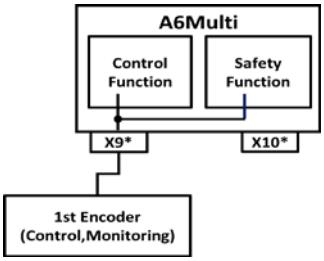	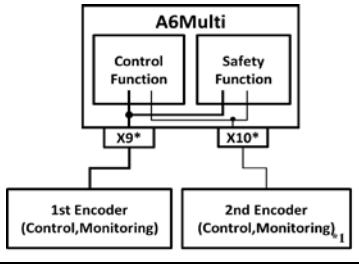	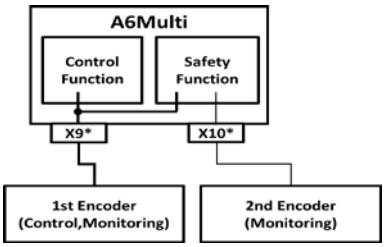
X9A, X9B	Absolute encoder	Absolute encoder	Absolute encoder
X10A, X10B	-	Panasonic serial communication scale or ABZ parallel external scale	SSI serial communication scale or EnDat2.2 Non Safety scale or Panasonic serial communication scale or ABZ parallel external scale

(Note 1) In the case of semi-closed control, it is not used for control but used only for monitoring.

Encoder configuration corresponding to each safety function

Safety function	Safety level (Note 3) ・Safety integrity level ・Performance level ・Category	Encoder configuration									
		Conf. 1			Conf. 2				Conf. 3		
		Position control	Speed control	Torque control	Position control	Speed control	Torque control (Note 5)	Full closed control	Position control	Speed control	Torque control (Note 5)
SS2, SOS, SLA, SAR, SLI, SDI, SLP, SCA	SIL3、PLe、Cat4 (Note 2) SIL3、PLe、Cat3	-	-	-	✓	✓	✓	✓	✓	✓	✓
SS1, SLS, SSM, SSR	SIL3, PLe, Cat4 (Note 2) SIL3, PLe, Cat3	-	-	-	✓	✓	✓	✓	✓	✓	✓
	SIL2, PLd, Cat3	✓	✓	-	-	-	-	-	-	-	-
STO, SBC (Note 4)	SIL3, PLe, Cat4 (Note 2) SIL3, PLe, Cat3	✓	✓	✓	✓	✓	✓	✓	✓	✓	✓

(Note 2) Cat. 4 requires test pulse for the purpose of safety input diagnose.

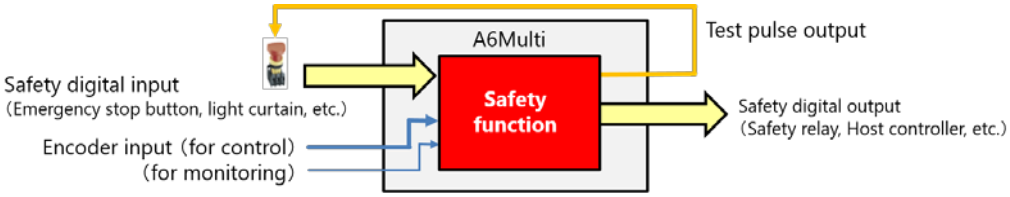

(Note 3) To use multiple safety functions, the lower safety level will be provided.
Ex.) When STO and SLS are used and Encoder configuration is Conf. 1, Safety level of Servo amplifier is SIL2, PL d, Cat.3.

(Note 4) Since STO and SBC do not monitor the encoder data, torque control can be used.

(Note 5) Except for STO and SBC, encoder data is monitored, however torque control can be used because the encoder is duplicated.

8.3 Safety input and output signals

8.3.1 Safety input

There are 5 safety inputs (4 duplex safety inputs and 1 safety inputs) to be connected to this driver module. For duplex safety inputs, 2 signals (systems A and B) must be input for 1 input.

Class	Signal Name	Signal	Connector Pin No.	Content
Safety input	Duplex safety input 1	SDI1A	X5-15	Connects the A system for safety input signal.
		SDI1B	X5-32	Connects the B system for safety input signal.
	Duplex safety input 2	SDI2A	X5-14	Connects the A system for safety input signal.
		SDI2B	X5-31	Connects the B system for safety input signal.
	Duplex safety input 3	SDI3A	X5-13	Connects the A system for safety input signal.
		SDI3B	X5-30	Connects the B system for safety input signal.
	Duplex safety input 4	SDI4A	X5-12	Connects the A system for safety input signal.
		SDI4B	X5-29	Connects the B system for safety input signal.
	Safety input 1	SDIN	X5-11	Connects the safety input signal.

8.3.2 Safety output

As the safety outputs connected to this driver module, there are 2 duplex outputs and 2 brake output. Different current values flow for safety output and brake output.

Class	Signal Name	Signal	Connector Pin No.	Content
Safety output	Duplex safety output 1	SDO1A	X5-4	Connects to the A system for safety output signal. The maximum rated current value is 75 mA.
		SDO1B	X5-21	Connects to the B system for safety output signal. The maximum rated current value is 75 mA.
	Duplex safety output 2	SDO2A	X5-5	Connects to the A system for safety output signal. The maximum rated current value is 75 mA.
		SDO2B	X5-22	Connects to the B system for safety output signal. The maximum rated current value is 75 mA.
	Brake output 1	BRKO1+	X5-3	Connects to the external brake of the motor. Maximum rated current value is 1.5 A. (Note 1)
		BRKO1-	X5-2	Connects to the external brake of the motor. Maximum rated current value is 1.5 A. (Note 1)
	Brake output 2	BRKO2+	X5-20	Connects to the external brake of the motor. Maximum rated current value is 1.5 A. (Note 1)
		BRKO2-	X5-19	Connects to the external brake of the motor. Maximum rated current value is 1.5 A. (Note 1)

(Note 1) It varies depending on the size of the driver module. For more details, please refet to "REFERENCE SPECIFICATIONS Driver module section (SX-DSV03454)".

8.3.3 Testpulse outputs

A test pulse needs to be used to satisfy Cat4 with safety level.
By inputting the test pulse output from the serve driver into the safety input device and connecting its output to the safety input of the serve driver, it is possible to conduct a diagnosis on the safety input circuit of the serve driver.
Safety input circuit diagnosis is executed when the safety input device contact is turned ON (closed).
For connection procedures, refer to "8.4 Connection example".

Class	Signal Name	Signal	Connector Pin No.	Content
Test Pulse outputs	Test pulse output A	PULSA	X5-10	Outputs the test pulse.
	Test pulse output B	PULSB	X5-27	Outputs the test pulse.

8.4 Connection example

8.4.1 Safety input (for source output connection)

Examples of safety input connection for source output connection are shown in the figure below.

When connecting the source output circuit to the safety input, connect the negative terminal of the external power supply DC 24 V to the common input (COMA, COMB).

When test pulse is not used

■ **Duplex safety input**

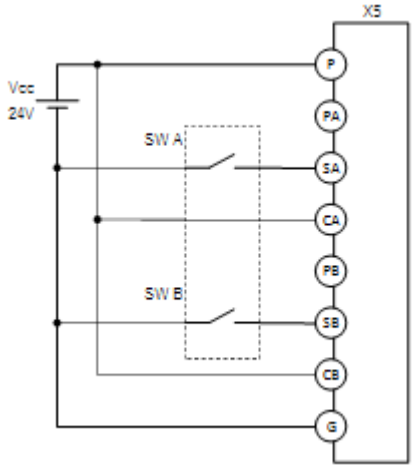

P : EX24V (17)
PA : PULSA (10)
SA : SDI1A (15), SDI2A (14), SDI3A (13), SDI4A (12)
CA : COMA (16)
PB : PULSB (27)
SB : SDI1B (32), SDI2B (31), SDI3B (30), SDI4B (29)
CB : COMB (33)
G : EXGND (34)

*The numbers in parentheses are connector pin numbers.

■ **Safety input**

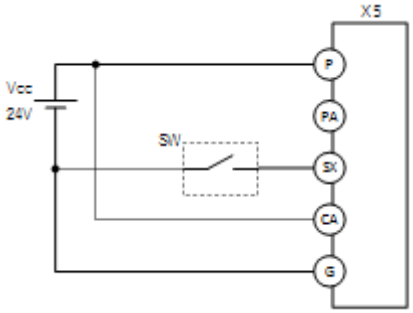

P : EX24V (17)
PA : PULSA (10)
SX : SDIN (11)
CA : COMA (16)
G : EXGND (34)

*The numbers in parentheses are connector pin numbers.

When test pulse is used

■ Duplex safety input

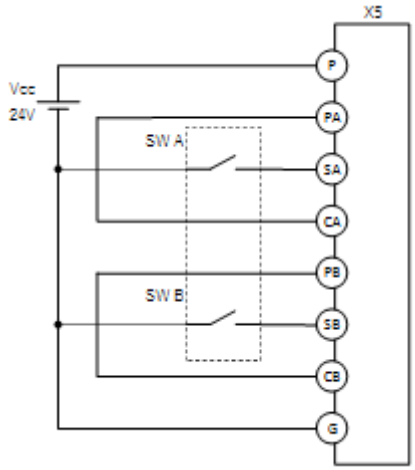

P : EX24V (17)
PA : PULSA (10)
SA : SDI1A (15), SDI2A (14), SDI3A (13), SDI4A (12)
CA : COMA (16)
PB : PULSB (27)
SB : SDI1B (32), SDI2B (31), SDI3B (30), SDI4B (29)
CB : COMB (33)
G : EXGND (34)

*The numbers in parentheses are connector pin numbers.

■ Safety input

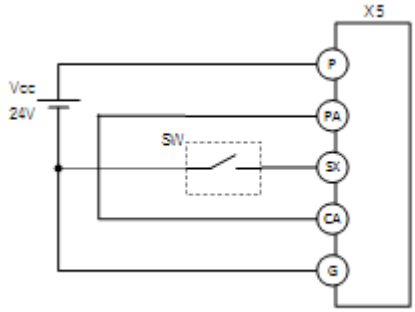

P : EX24V (17)
PA : PULSA (10)
SX : SDIN (11)
CA : COMA (16)
G : EXGND (34)

*The numbers in parentheses are connector pin numbers.

8.4.2 Safety input(for sink output connection)

Examples of safety input connection for sink output connection are shown in the figure below.

When connecting the sink output circuit to the safety input, connect the positive terminal of the external power supply DC 24 V to the common input (COMA, COMB).

When test pulse is not used

■ **Duplex safety input**

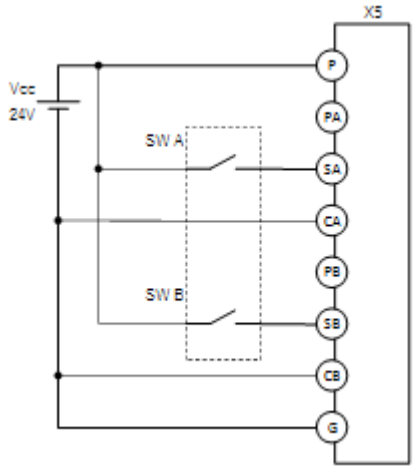

P : EX24V (17)
PA : PULSA (10)
SA : SDI1A (15), SDI2A (14), SDI3A (13), SDI4A (12)
CA : COMA (16)
PB : PULSB (27)
SB : SDI1B (32), SDI2B (31), SDI3B (30), SDI4B (29)
CB : COMB (33)
G : EXGND (34)

*The numbers in parentheses are connector pin numbers.

■ **Safety input**

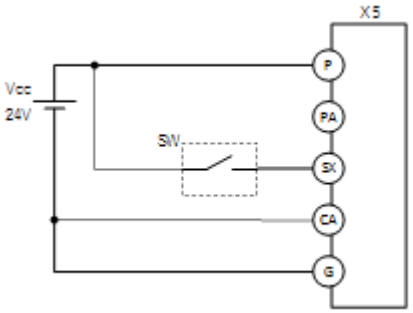

P : EX24V (17)
PA : PULSA (10)
SX : SDIN (11)
CA : COMA (16)
G : EXGND (34)

*The numbers in parentheses are connector pin numbers.

When test pulse is used

■ **Duplex safety input**

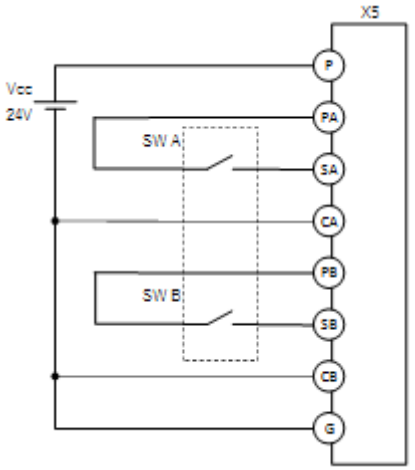

P : EX24V (17)
PA : PULSA (10)
SA : SDI1A (15), SDI2A (14), SDI3A (13), SDI4A (12)
CA : COMA (16)
PB : PULSB (27)
SB : SDI1B (32), SDI2B (31), SDI3B (30), SDI4B (29)
CB : COMB (33)
G : EXGND (34)

*The numbers in parentheses are connector pin numbers.

■ **Safety input**

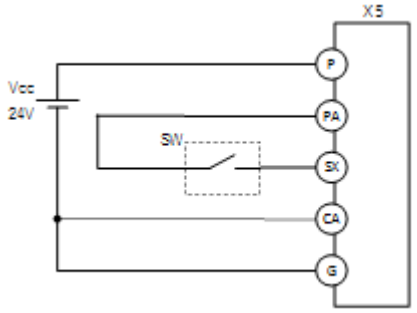

P : EX24V (17)
PA : PULSA (10)
SX : SDIN (11)
CA : COMA (16)
G : EXGND (34)

*The numbers in parentheses are connector pin numbers.

8.4.3 Safety output

Examples of safety output connection are shown in the figure below.

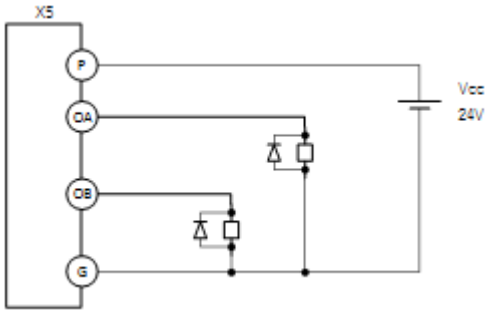

P : EX24V (17)
OA : SDO1A (5), SDO2A (4)
OB : SDO1B (22), SDO2B (21)
G : EXGND (34)

*The numbers in parentheses are connector pin numbers.

8.4.4 Brake output

Examples of brake output connection are shown in the figure below.

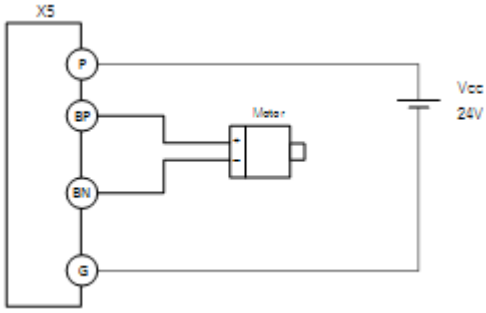

P : EX24V (17)
BP : BRKO1+ (3), BRKO2+ (20)
BN : BRKO1- (2), BRKO2- (19)
G : EXGND (34)

*The numbers in parentheses are connector pin numbers.

8.5 Details of safety functions

8.5.1 Safety functions

This driver module supports 14 types of safety functions.

Refer to

For details, refer to "PANATERM for Safety Programming Manual (SX-DSV03508)".

Safety functions		Outline	
STO (Safe Torque Off)	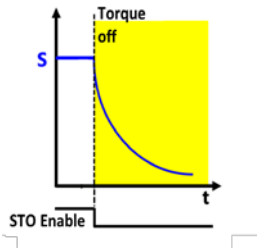	• It turns off the output torque of the motor. • When a hardware have an error, alarm will occur.	
SSX (Safe Stop 1/2)	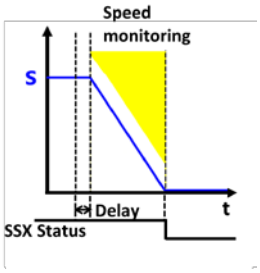	SS1 (Safe Stop 1) (SSX + STO) 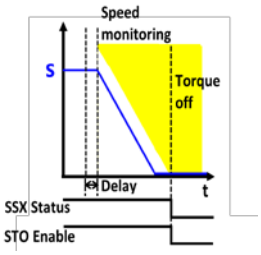	• It monitors whether the emergency stop sequence of the motor stops safely. (SSX) • It goes into safety torque off state if the motor stops. (STO)
		SS2 (Safe Stop 2) (SSX + SOS) 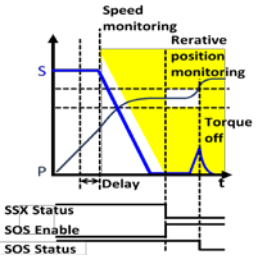	• It monitors whether the emergency stop sequence of the motor stops safely. (SSX) • It goes into the safe operating stop state if the motor stops. (SOS)
SLS (Safe Limited Speed)	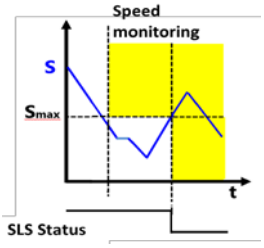	• It monitors whether the motor is operating at the speed limit or lower.	
SSM (Safe Speed Monitoring)	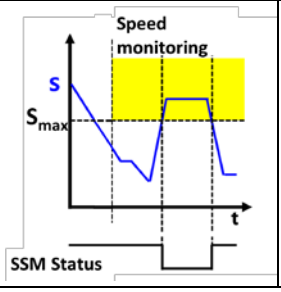	• It monitors whether the motor is operating within the specified speed threshold values. • Even if the speed limit is exceeded, the SSM Status is not retained.	

(To be continued)

Safety functions		Outline
SSR (Safe Speed Range)	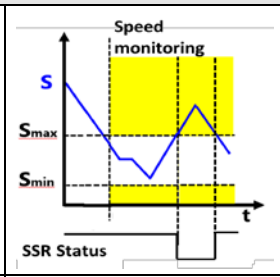	• It monitors whether the specified speed range for the motor speed is observed. • Even if the speed limit is exceeded, the SSR Status is not retained.
SOS (Safe Operating Stop)	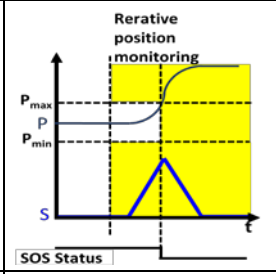	• It monitors the motor stop state within the range of the specified threshold.
SDI (Safe Direction Indication)	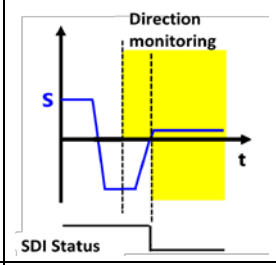	• It monitors the driving direction of the motor.
SLI (Safe Limited Increment)	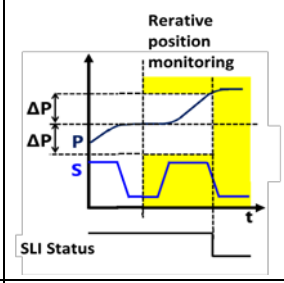	• It monitors whether the amount of motor movement exceeds the specified value.
SLA (Safe Limited Acceleration)	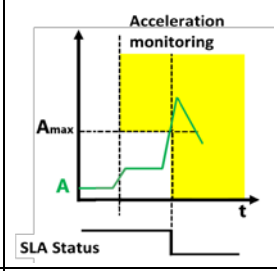	• It monitors whether the motor exceeds the acceptable acceleration.
SAR (Safe Acceleration Range)	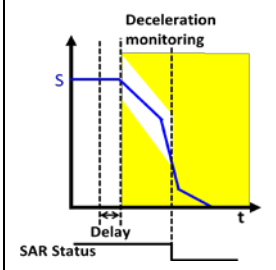	• It monitors whether the deceleration of the motor is kept within the range of the specified speed curve.

(To be continued)

Safety functions		Outline
SBC (Safe Brake Control)	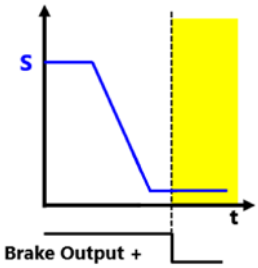	• It controls output signal to brake. • It diagnoses the output signal. (It uses a dedicated brake output.) • When a hardware have an error, alarm will occur.
SLP (Safety Limited Position)	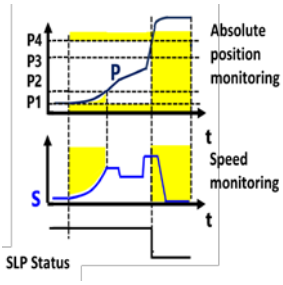	• It monitors whether the speed and position that can be stopped at the specified target position.
SCA (Safe Cam)	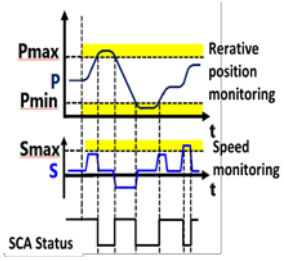	• It monitors whether the speed and position that can be stopped within the specified position range

8.5.2 Optional functions

This driver module supports 6 types of optional functions.

Refer to

For details, refer to "PANATERM for Safety Programming Manual (SX-DSV03508)".

Optional functions		Outline
SEL (Safe Emergency Limit)		• It monitors whether the current speed and the specified maximum deceleration does not exceed the minimum and maximum limit positions.
SRX (Safe Referencing on X-Axis)		• It set the physical position data to the position information in the servo amplifer. • It verificate whether the position information in the servo amplifier does not deviate from the physical position.
SRS (Safe Referencing State)		• It gets the monitoring status of SRX. • It resets the monitoring condition of SRX.
EDM (External Device Monitoring)	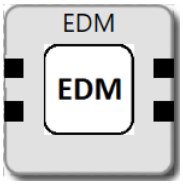	• It monitors external devices connected to the safety unit.
ECS (Encoder Control Supervisor)		• It mutes the encoder alarm. • It gets a status indicating whether an alarm has occurred.
ICS (Input Element Muting)		• It mutes the alarm related to the safety input. • It gets a status indicating whether an alarm has occurred.

8.5.3 Details of Safe Torque Off (STO)

8.5.3.1 Change point from MINAS-A5 series

	MINAS-A5	MINAS-A6	
STO operation	Alarm generation Err30.0	No Alarm 7-segment LED is ”St”	
Method of releasing the STO state	Release of the factors and Alarm clear	After the STO state status When the alarm is not generated	After the STO state status When the alarm is generated
		Release of the factors of STO and servo off command	Release of the factors of STO/alarm and Alarm clear

8.5.3.2 Outline of safe torque off (STO) function

The safe torque off (STO) function is a safety function that shuts the motor current and turns off motor output torque by forcibly turning off the driving signal of the servo driver internal power transistor.

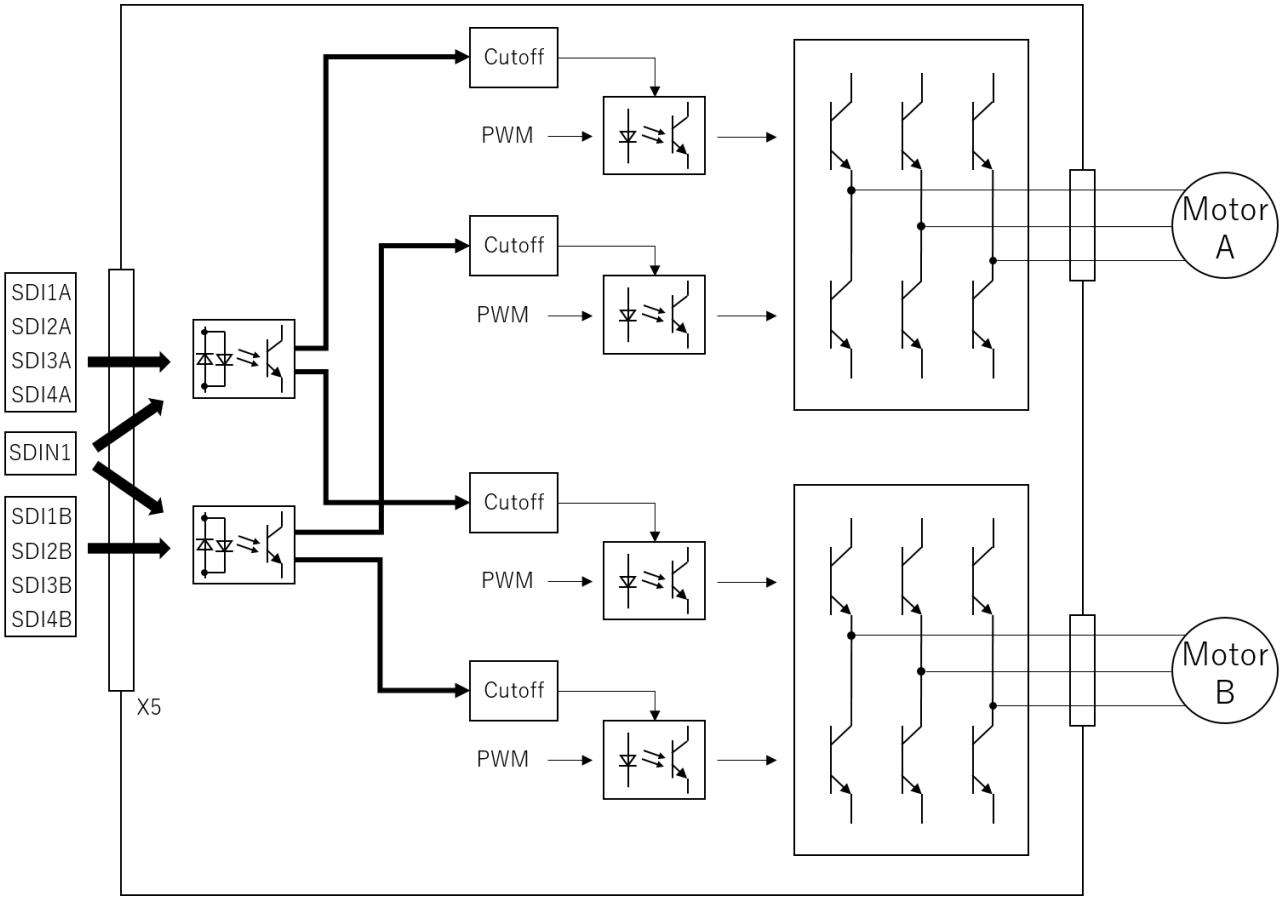

When STO is activated, the servo driver turns off the servo-ready output signal (S-RDY) and goes into a STO state, with the indication in the front panel turning to “St”. When STO input is released and servo-on input is Off, it will automatically transition itself to Servo ready state.

Note) To ensure that the servo amplifier recognizes that STO has turned off, keep STO off for at least 8 ms.

8.5.3.3 Activation to STO state, timing diagram

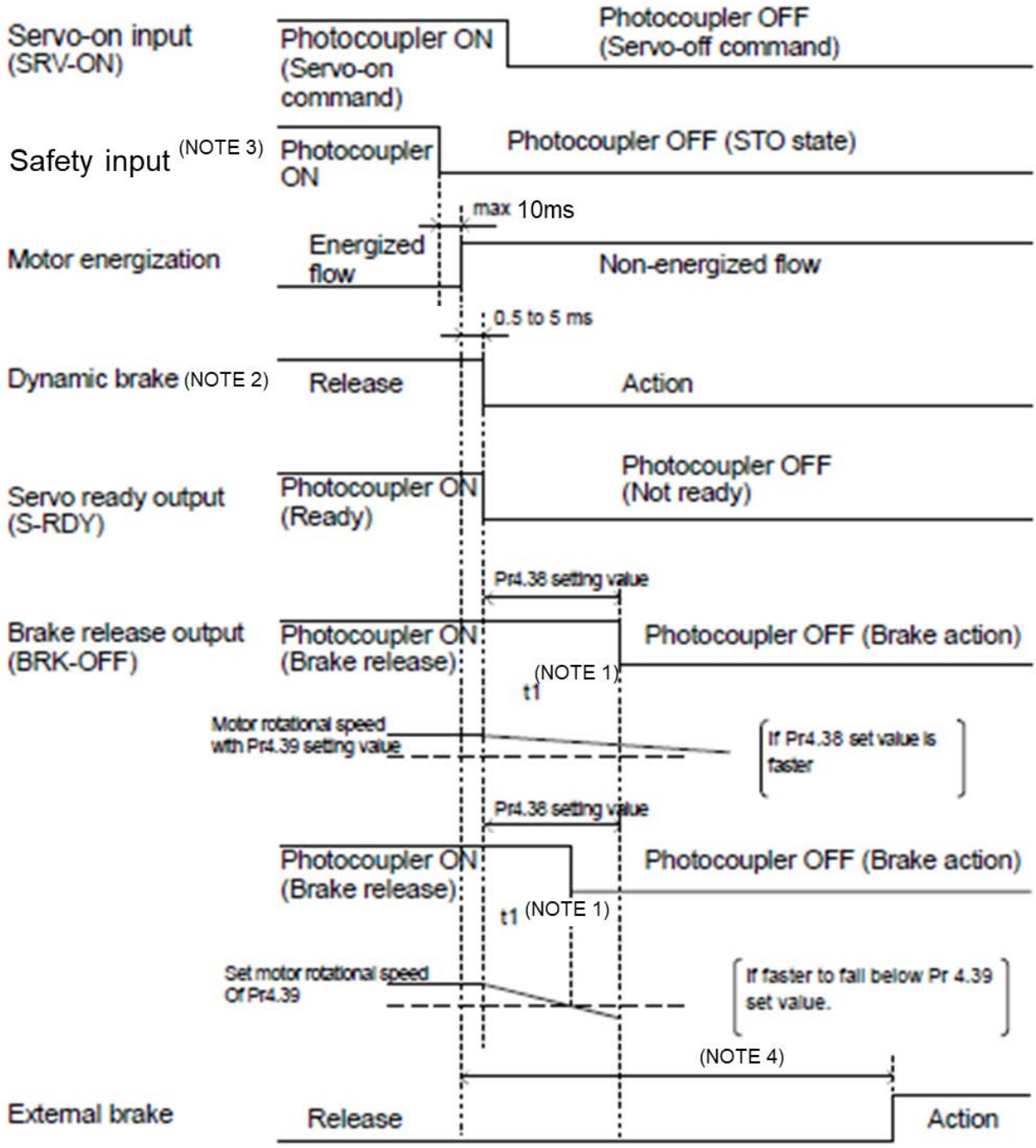

(NOTE 1) t1 will be a shorter time of either the setup value of Pr4.38 “Mechanical braking setting during operation” or elapsing time for the motor speed to fall below Pr4.39 “Brake release speed setup.”

(NOTE 2) Dynamic brake operates to the setting of Pr5.10 “Sequence at alarm.”

(During STO state, “sequence at alarm” will be applied even though no alarm is generated.)

(NOTE 3) When you use redundant safety input to activate STO function, you should turn safety input OFF at the same time.

(NOTE 4) Since servo-lock cannot be performed in the interval after motor energization is cut off until the external brake operates, the work may fall by gravity from the vertical axis. Take an appropriate measure to prevent this.

8.5.3.4 Return timing diagram from STO state

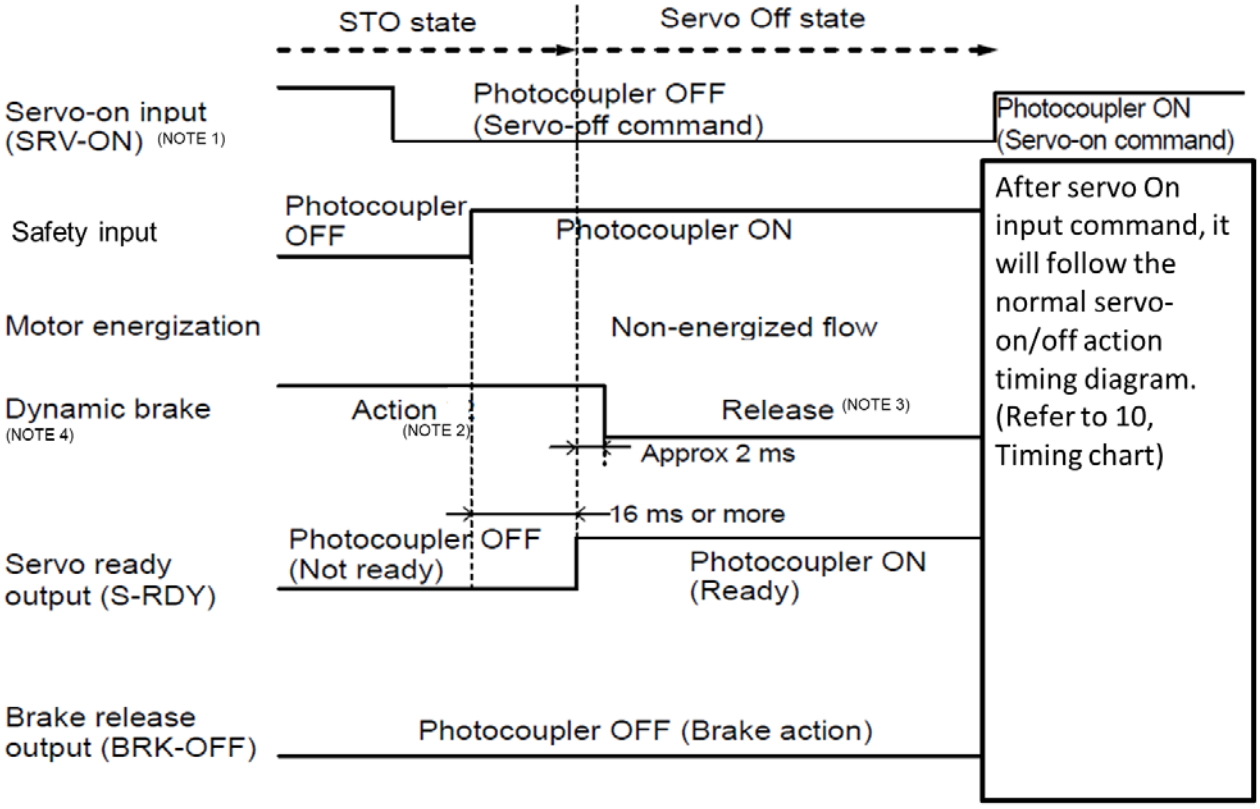

(NOTE 1) Photocouplers for safety input 1 and 2 should be turned on again with servo-on input turned off.

Returning photocouplers for safety inputs 1 and 2 to ON will automatically reset it to Servo ready mode.

There is no need to conduct alarm-clear.

(NOTE 2) This is an STO state and the dynamic brake operates according to Pr5.10 “Sequence at alarm.”

(During STO state, “sequence at alarm” will be applied even though no alarm is generated.)

(NOTE 3) This is normal servo-off condition and the dynamic brake operates according to Pr5.06 “Sequence at servo-off.”

8.5.3.5 Connection example

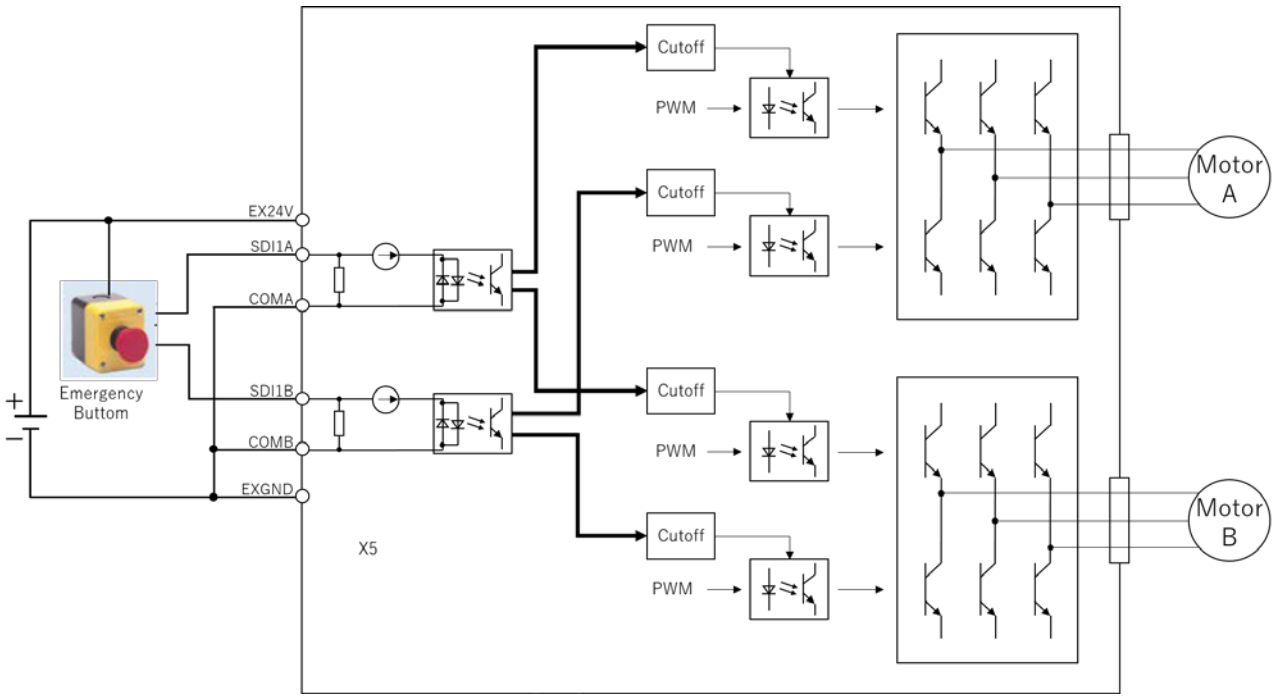

8.6 PANATERM for Safety

To use safety functions, the safety monitoring function must be programmed using the safety function setting software PANATERM for Safety and written into driver module.

Refer to

For details on the procedures for preparing the safety monitoring program, refer to "PANATERM for Safety Programming Manual (SX-DSV03508)".

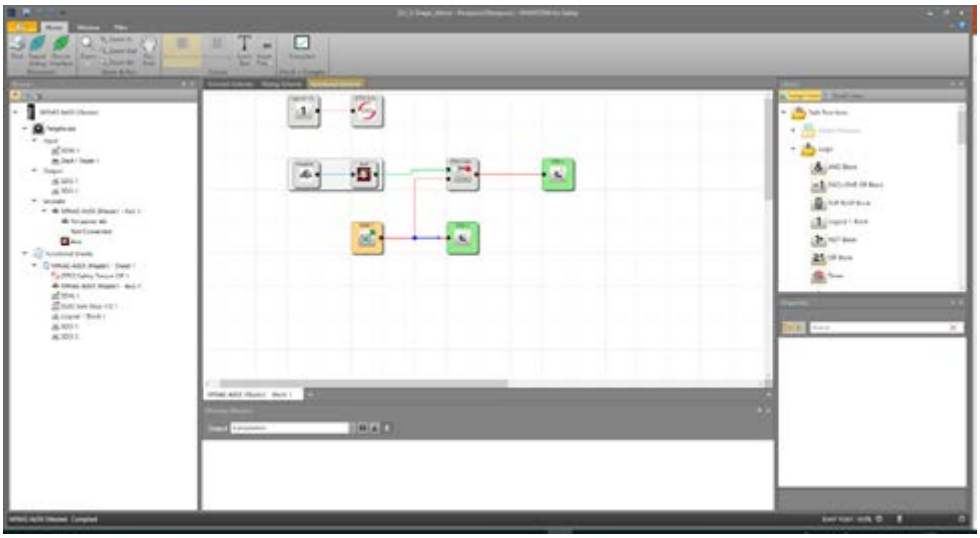

◆ **CAUTION**

Cautions on setting up the safety monitoring program

- **A license key (optional part number: DV0PM24621) is required in order to use PANATERM for Safety.**
  Refer to
  For details, refer to "PANATERM for Safety Programming Manual (SX-DSV03508)".
- **As the threshold values (acceptable range) for position monitoring and speed monitoring vary in the safety monitoring program depending on the inertia ratio, filter settings, gain settings, and operating speed, specify appropriate settings in accordance with your operating conditions.**
- **Write the safety monitoring program to driver module in the servo OFF state.**
- **Check the specification of the external scale and specify an appropriate value when setting up the voltage for the external scale connected to the driver module. An incorrect setting may cause a damage in the external scale.**
- **Only the driver module (device) and the STO function (off state) are valid as the safety monitoring program at the time of shipment, and it is possible to drive the motor. However, rewrite the safety monitoring program according to the customer's device configuration.**

8.7 The operation of the driver module

Depending on the safety monitoring program of the safety part, the motor control processing of the driver module is affected as follows.

8.7.1 Safety STO status

When a recoverable alarm (Alarm code starts with A) occurs in the safety part, the axis that is the target of the recoverable alarm enters the STO state. In addition, the STO state can be intentionally set in the safety monitoring program.

In the STO state, the motor current cut off and turn off the motor output torque.

On EtherCAT communication, the PDS (Power Drive Systems) state of the axis that is in the STO state is automatically “Switch on disabled”, but the ESM (EtherCAT State Machine) state does not transition automatically, and follow the host controller.

Refer to

For details on the PDS status and ESM status, refer to "TECHNICAL REFERENCE EtherCAT Communication Specification (SX-DSV03456)".

The driver module clears the deviation when the safety part transitions to the STO state.
During deviation clearing process, the system causes the internal command position to follow up the feedback position.

The 7-segment LED display on the drive module is STO display (St) when no other alarms or warnings occur in the driver information display mode.

Refer to

For details, refer to Chapter "3.5.2 Driver information display mode" of this document.

In the safety information display mode, the 4-digit error code is displayed one by one in sequence, following the single-digit alphabet (A) indicating the alarm type.

Refer to

For details, refer to Chapter "3.5.3 Safety information display mode" of this document.

8.7.2 Safety fatal error status

If a fatal error (Error code starts with F) occurs in the safety part, the motor current is cut off by the STO function, and both Axis A and Axis B of the driver module will enter an alarm state due to Err31.5 (Safety function error protection 5).

On EtherCAT communication, When Err31.5 occurs, the motor of each axis stops according to the setting of EtherCAT object 2105h / 2505h (Sequence at alarm), and the PDS status changes to “Fault”, but the ESM state does not change automatically and follows the host controller.

The 7-segment LED display of the drive module is an Err31.5 alarm display in the amplifier information display mode when no other high priority alarm has occurred.

Refer to

For details, refer to Chapter "3.5.2 Driver information display mode" of this document.

In the safety information display mode, a 4-digit error code is displayed in sequence, one digit after the one-digit alphabet (F) indicating the alarm type.

Refer to

For details, refer to Chapter "3.5.3 Safety information display mode" of this document.

8.7.3 EtherCAT object to check the safety status

To check the STO status of each axis with the host controller, refer to the following EtherCAT object.

- EtherCAT object 2322h(Axis A) / 2722h(Axis B) : Logical output signal

  bit 30: STO status monitor output

  0: non-STO

  1: STO

Refer to

For details on these object specifications, refer to "TECHNICAL REFERENCE EtherCAT Communication Specification (SX-DSV03456)".

8.8 Alarm clearing for safety monitoring

The alarm can be cleared according to the procedure below in case an alarm which can be reset (Alarm code starts with A) occurs.

◆ PROCEDURE

1. **Turn off the servo ON command for the driver module.**
2. **Remove the cause of the alarm.**
3. **Use one of the following methods to reset the safety alarm.**
   - **Execution of alarm clear with safety input**
   - **Execution of alarm clear from controller (via EtherCAT communication : CoE)**
   - **Execution of alarm clear from PANATERM for Multi (via USB communication or EtherCAT communication : EoE)**

◆ NOTE

- **The alarm will be generated if the cause of the alarm is detected again even when alarm clear is executed.**

Timing of alarm clear

■ **Execution of alarm clear with safety input**

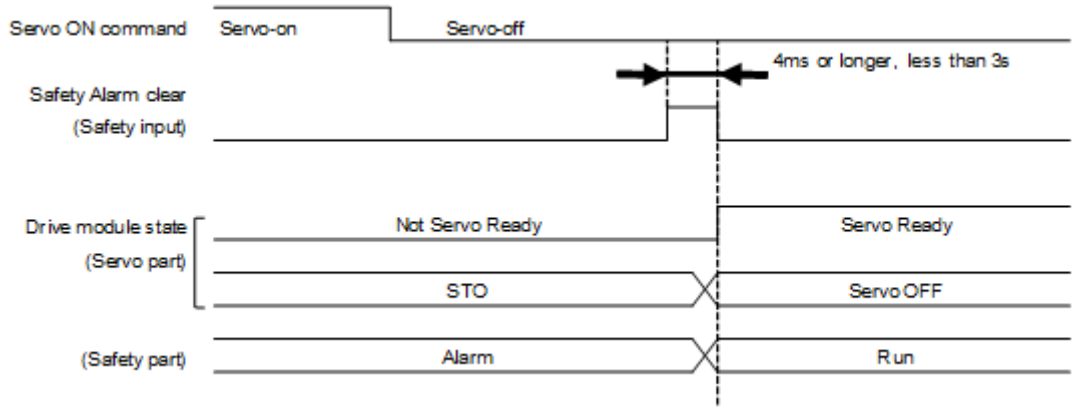

■ **Execution of alarm clear from controller or PANATERM for Multi**

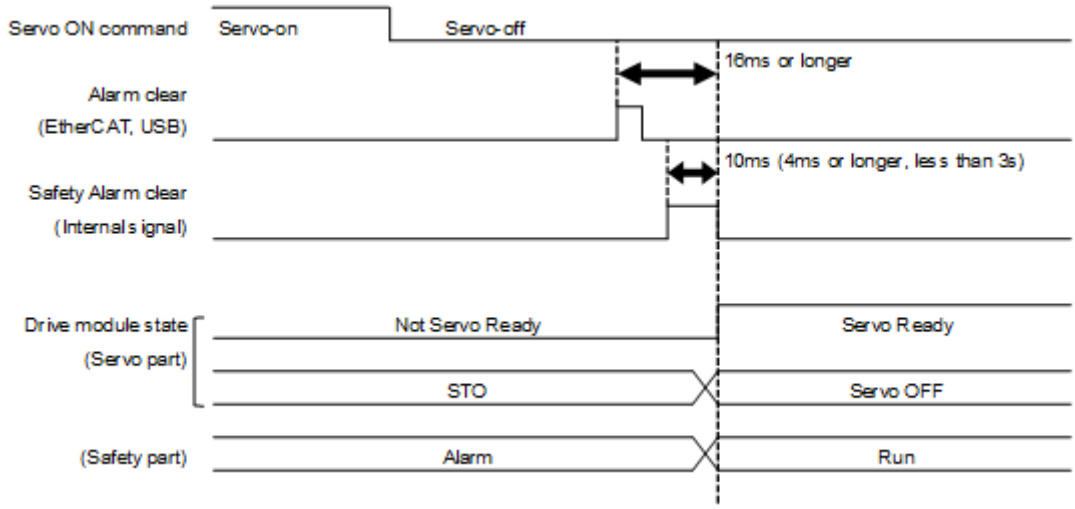

8.9 Safety precautions

- When using the safety functions, be sure to perform equipment risk assessment to ensure that the system conforms to the safety requirements.
  Using it in a state that does not satisfy the safety requirement function may result in personal injury.
- Even while the safety functions are working, the following potential safety hazards exist. Be sure to check the safety in risk assessment.
  Incorrect use may cause an accident resulting in injury or death.
  - The motor may move when external force (e.g. gravity force on vertical axis) is exerted on it. Provide an external brake, etc., as necessary to secure the motor. Note that the purpose of servo motor with brake is holding and it cannot be used for braking application.
  - When parameter Pr5.10 "Sequence at alarm" is set to free run (disable dynamic brake), the motor is in free run state and requires longer stop distance even if no external force is applied. Make sure that this does not cause any problem.

  (In safety state, even if an alarm does not occur, “Sequence at alarm” is applied.)
  - The motor may move at electrical angle of about 180 degrees due to a power transistor failure.Make sure this is not a problem.
  - The safety state turns off the current to the motor but does not turn off power to the driver module and power supply module nor isolate it electrically. When starting maintenance service of the driver module or power supply module, turn off the power to these modules and check that the charge lamp of each module is off.
- Dynamic brake and external brake release signal outputs are not related to safety function. When designing the system, make sure that the failure of external brake release during the safety state does not result in a dangerous condition. Incorrect use may cause an accident resulting in injury or death.
- When using the safety functions, connect equipment conforming to the safety standards. Use of equipment that does not comply with safety standards may result in a serious accident.

9

List of Parameters

9.1 List of parameters

The attribute of a parameter indicates the point at which the modified parameter setting becomes effective.

Attribute	Description
A	Always effective
B	Avoid changes during motor operation and command dispatch as much as possible as it may cause transient unstable operation. * Reflection timing of parameter change made during the motor operation or command transfer is not defined.
C	Effective after reset control power or after pin assign setting from PANATERM for Multi
R	Effective after reset control power
X	Read only - It cannot be changed using the normal procedure.
S	Shared by multiple axes • The setting value specified for one axis becomes valid for both Axis A and Axis B with this parameter. The same value appears for both Axis A and Axis B when the parameter is read. When a parameter is written, the change is reflected in both Axis A and Axis B regardless of whether it is written for Axis A or Axis B. • The change is reflected on both Axis A and Axis B when a parameter with the shared by multiple axes attribute is written even if some of the axes are disabled by Pr0.20 "Axis limit setting"

9.1.1 Class 0: Basic setting

No.	Title	Unit	Range	Size [byte]	Function/Contents	Attribute	Related control mode	Reference
00	For manufacturer's use	-	-	2	Permanently set at 1.	-	-	-
01	Control mode setup	-	0 to 6	2	Select the control mode of the servo driver. 0: semi-closed control (position/velocity/torque control, selectable) 1 to 5:To be used by the manufacturer but not by the user. 6: Full-closed control (Position control only) * The first edition of the software version (Ver1.01) does not support the setting value 6.	R	All	-
02	Real-time auto-gain tuning setup	-	0 to 6	2	You can set up the action mode of the real-time auto-gain tuning.	B	All	5.1.1 5.1.3 5.1.4
03	Real-time auto-tuning machine stiffness setup	-	0 to 31	2	Set the machine stiffness during real-time auto-gain tuning.	B	All	5.1.1 5.1.3 5.1.4
04	Inertia ratio	%	0 to 10000	2	You can set up the ratio of the load inertia against the rotor (of the motor) inertia.	B	All	-
08	For manufacturer's use	-	-	4	Permanently set at 0.	-	-	-
09	For manufacturer's use	-	-	4	Permanently set at 1.	-	-	-
10	For manufacturer's use	-	-	4	Permanently set at 1.	-	-	-
11	For manufacturer's use	-	-	4	Permanently set at 2500.	-	-	-
12	For manufacturer's use	-	-	2	Permanently set at 0.	-	-	-

(To be continued)

No.	Title	Unit	Range	Size [byte]	Function/Contents	Attribute	Related control mode	Reference
13	1st torque limit	%	0 to 500	2	You can set up the 1st limit value of the motor output torque. The limit of parameter value is determined by the maximum torque of the motor connected.	B	All	6.1 7.4
14	Position deviation excess setup	command unit	0 to 2^{10}	4	Set excess range of positional deviation by the command unit.Err24.0 (Error detection of position deviation excess) becomes invalid when it set up this to 0.Unit is according to Pr5.20 (Position setup unit select). The shipping set value is equivalent to 10 rotations when the command pluse per rotation is 23-bits.	A	Position, Full-closed	7.4
15	Absolute encoder setup	-	0 to 4	2	Select the use method of the absolute encoder. * 0: Use as an absolute mode 1: Use as an incremental mode. 2: Use as an absolute mode, but ignore the multi-turn counter over. 3: Use as an absolute mode, but not use multi-turn counter. (single-turn absolute mode) 4: Use as an absolute mode, but any value can be set for the upper limit of the multi-turn counter, and ignore the multi-turn counter over.(Countinuous rotating absolute mode) Note • Absolute encoder will be handled as an incremental mode in internal control under full-closed control.	C	Position, Velocity, Torque	4.7.1 6.6 6.7
16 to 19	For manufacturer's use	-	-	2	Permanently set at 0.	-	-	-
20	Axis limit setting	-	0 to 1	2	Limits the number of axes used by the driver module. 0: No limit on the number of axes 1: 1 Axis (Axis A) only	R S	All	-

9.1.2 Class 1: Gain adjustment

No.	Title	Unit	Range	Size [byte]	Function/Contents	Attribute	Related control mode	Reference
00	1st gain of position loop	0.1/s	0 to 30000	2	Set the 1st gain of position loop.	B	Position, Full-closed	5.2
01	1st velocity loop gain	0.1 Hz	1 to 32767	2	Set the 1st gain of velocity loop.	B	All	5.2
02	1st velocity loop integration time constant	0.1 ms	1 to 10000	2	Set the 1st velocity loop integration time constant. Keep integration if setting value is 9999. Becomes invalid if setting value is 10000.	B	All	5.2
03	1st filter of velocity detection	-	0 to 5	2	Set the 1st velocity detection filter to one of 6 levels.	B	All	5.2
04	1st torque filter time constant	0.01 ms	0 to 2500	2	Set the time constant of the 1st torque filter.	B	All	5.2
05	2nd gain of position loop	0.1/s	0 to 30000	2	Set the 2nd position loop gain.	B	Position, Full-closed	5.2
06	2nd velocity loop gain	0.1 Hz	1 to 32767	2	Set the 2nd velocity proportional gain.	B	All	5.2
07	2nd velocity loop integration time constant	0.1 ms	1 to 10000	2	Set the 2nd velocity integration time constant. Keep integration if setting value is 9999. Becomes invalid if setting value is 10000.	B	All	5.2
08	2nd filter of velocity detection	-	0 to 5	2	Set the 2nd velocity detection filter to one of 6 levels.	B	All	5.2
09	2nd torque filter time constant	0.01 ms	0 to 2500	2	Set the time constant of the 2nd torque filter.	B	All	5.2
10	Velocity feed forward gain	0.1%	0 to 4000	2	Set the velocity feed forward gain.	B	Position, Full-closed	5.2.9
11	Velocity feed forward filter	0.01 ms	0 to 6400	2	Set the time constant of velocity feed forward filter. *It becomes invalid in two-degree-of-freedom control mode.	B	Position, Full-closed	5.2.9
12	Torque feed forward gain	0.1%	0 to 2000	2	Set the torque feed forward gain.	B	All	5.2.9
13	Torque feed forward filter	0.01 ms	0 to 6400	2	Set the torque feed forward filter.	B	All	5.2.9
14	2nd gain setup	-	0 to 1	2	Using the gain switching function, set this parameter for the best tuning.	B	All	5.2.5
15	Mode of position control switching	-	0 to 10	2	Set the condition of gain switching for position control.	B	Position, Full-closed	5.2.5
16	Delay time of position control switching	0.1 ms	0 to 10000	2	Set the delay time when switching from 2nd to 1st gain.	B	Position, Full-closed	5.2.5
17	Level of position control switching	-	0 to 20000	2	Set the gain switching level.	B	Position, Full-closed	5.2.5
18	Hysteresis at position control switching	-	0 to 20000	2	Set the hysteresis at gain switching.	B	Position, Full-closed	5.2.5
19	Position gain switching time	0.1 ms	0 to 10000	2	Set the position gain switching time upon gain switching.	B	Position, Full-closed	5.2.5
20	Mode of velocity control switching	-	0 to 5	2	Set the condition of gain switching for velocity control	B	Velocity	5.2.5

(To be continued)

No.	Title	Unit	Range	Size [byte]	Function/Contents	Attribute	Related control mode	Reference
21	Delay time of velocity control switching	0.1 ms	0 to 10000	2	Set the delay time when switching from 2nd to 1st gain.	B	Velocity	5.2.5
22	Level of velocity control switching	-	0 to 20000	2	Set the gain switching level.	B	Velocity	5.2.5
23	Hysteresis at velocity control switching	-	0 to 20000	2	Set the hysteresis at gain switching.	B	Velocity	5.2.5
24	Mode of torque control switching	-	0 to 3	2	Set the condition of gain switching for torque control	B	Torque	5.2.5
25	Delay time of torque control switching	0.1 ms	0 to 10000	2	Set the delay time when switching from 2nd to 1st gain.	B	Torque	5.2.5
26	Level of torque control switching	-	0 to 20000	2	Set the gain switching level.	B	Torque	5.2.5
27	Hysteresis at torque control switching	-	0 to 20000	2	Set the hysteresis at gain switching.	B	Torque	5.2.5
28 to 78	For manufacturer's use	-	-	2	Do not change factory default settings.	-	-	-

9.1.3 Class 2: Damping control

No.	Title	Unit	Range	Size [byte]	Function/Contents	Attribute	Related control mode	Reference
00	Adaptive filter mode setup	-	0 to 6	2	Set the operation of adaptive filter.	B	Position, Velocity, Full-closed	5.1.2
01	1st notch frequency	Hz	50 to 5000	2	Set the notch frequency of 1st resonance suppression notch filter. Set the notch frequency to the resonance frequency of the machine.	B	All	5.2.6
02	1st notch width selection	-	0 to 20	2	Set the notch width of 1st resonance suppression notch filter.	B	All	5.2.6
03	1st notch depth selection	-	0 to 99	2	Set the notch depth of 1st resonance suppression notch filter.	B	All	5.2.6
04	2nd notch frequency	Hz	50 to 5000	2	Set the notch frequency of 2nd resonance suppression notch filter. Set the notch frequency to the resonance frequency of the machine.	B	All	5.2.6
05	2nd notch width selection	-	0 to 20	2	Set the notch width of 2nd resonance suppression notch filter.	B	All	5.2.6
06	2nd notch depth selection	-	0 to 99	2	Set the notch depth of 2nd resonance suppression notch filter.	B	All	5.2.6
07	3rd notch frequency	Hz	50 to 5000	2	Set the notch frequency of 3rd resonance suppression notch filter. Set the notch frequency to the resonance frequency of the machine. Automatically set when the adaptive notch is enabled.	B	All	5.1.2 5.2.6
08	3rd notch width selection	-	0 to 20	2	Set the notch width of 3rd resonance suppression notch filter. Automatically set when the adaptive notch is enabled.	B	All	5.1.2 5.2.6
09	3rd notch depth selection	-	0 to 99	2	Set the notch depth of 3rd resonance suppression notch filter. Automatically set when the adaptive notch is enabled.	B	All	5.1.2 5.2.6
10	4th notch frequency	Hz	50 to 5000	2	Set the notch frequency of 4th resonance suppression notch filter. Set the notch frequency to the resonance frequency of the machine. Automatically set when the adaptive notch is enabled.	B	All	5.1.2 5.2.6
11	4th notch width selection	-	0 to 20	2	Set the notch width of 4th resonance suppression notch filter. Automatically set when the adaptive notch is enabled.	B	All	5.1.2 5.2.6

(To be continued)

No.	Title	Unit	Range	Size [byte]	Function/Contents	Attribute	Related control mode	Reference
12	4th notch depth selection	-	0 to 99	2	Set the notch depth of 4th resonance suppression notch filter. Automatically set when the adaptive notch is enabled.	B	All	5.1.2 5.2.6
13	Selection of damping filter switching	-	0 to 6	2	Select the filters to be used for damping control.	B	Position, Full-closed	5.2.7
14	1st damping frequency	0.1 Hz	0 to 3000	2	You can set up the 1st damping frequency of the damping control which suppresses vibration at the load edge. Setting value of 5 (= 0.5 Hz) or higher is valid.	B	Position, Full-closed	5.2.7
15	1st damping filter setup	0.1 Hz	0 to 1500	2	Fine tune the 1st filter damping control. Decrease the setting value to avoid torque saturation or increase the value to improve the response.	B	Position, Full-closed	5.2.7
16	2nd damping frequency	0.1 Hz	0 to 3000	2	You can set up the 2nd damping frequency of the damping control which suppresses vibration at the load edge. Setting value of 5 (= 0.5 Hz) or higher is valid.	B	Position, Full-closed	5.2.7
17	2nd damping filter setup	0.1 Hz	0 to 1500	2	Fine tune the 2nd filter damping control. Decrease the setting value to avoid torque saturation or increase the value to improve the response.	B	Position, Full-closed	5.2.7
18	3rd damping frequency	0.1 Hz	0 to 3000	2	You can set up the 3rd damping frequency of the damping control which suppresses vibration at the load edge. Setting value of 5 (= 0.5 Hz) or higher is valid.	B	Position, Full-closed	5.2.7
19	3rd damping filter setup	0.1 Hz	0 to 1500	2	Fine tune the 3rd filter damping control. Decrease the setting value to avoid torque saturation or increase the value to improve the response.	B	Position, Full-closed	5.2.7
20	4th damping frequency	0.1 Hz	0 to 3000	2	You can set up the 4th damping frequency of the damping control which suppresses vibration at the load edge. Setting value of 5 (= 0.5 Hz) or higher is valid.	B	Position, Full-closed	5.2.7
21	4th damping filter setup	0.1 Hz	0 to 1500	2	Fine tune the 4th filter damping control. Decrease the setting value to avoid torque saturation or increase the value to improve the response.	B	Position, Full-closed	5.2.7

(To be continued)

No.	Title	Unit	Range	Size [byte]	Function/Contents	Attribute	Related control mode	Reference
22	Positional command smoothing filter	0.1 ms	0 to 10000	2	[For position control,full-closed control] • For conventional control (Pr 6.47 bit 0 = 0) will set time constant of primary delay filter against position command. • 2 degrees of freedom control (Pr 6.47 bit 0 = 1) will be set to time constant of command response filter. Maximum value is limited to 2,000 (=200.0 ms) (Note 1) [For velocity control] • For conventional control (Pr 6.47 bit 0 = 0) this setting will be ignored. • 2 degrees of freedom control (Pr 6.47 bit 0 = 1) will be set to time constant of command response filter. Maximum value is limited to 640 (= 64.0 ms) (Note 1)	B	Position, Velocity, Full-closed	4.2.3 5.2.16 5.2.17 5.2.18
23	Positional command FIR filter	0.1 ms	0 to 10000	2	Set the time constant of the FIR filter in response to the positional command.	B	Position, Full-closed	4.2.3
24	5th notch frequency	Hz	50 to 5000	2	Set the notch frequency for the 5th resonance suppression notch filter. Set the notch frequency to the resonance frequency of the machine.	B	All	5.2.6
25	5th notch width selection	-	0 to 20	2	Set the notch width for the 5th resonance suppression notch filter.	B	All	5.2.6
26	5th notch depth selection	-	0 to 99	2	Set the notch width for the 5th resonance suppression notch filter.	B	All	5.2.6
27	1st damping width setting	-	0 to 1000	2	Fine tune the 1st damping control function.	B	Position, Full-closed	5.2.7
28	2nd damping width setting	-	0 to 1000	2	Fine tune the 2nd damping control function.	B	Position, Full-closed	5.2.7
29	3rd damping width setting	-	0 to 1000	2	Fine tune the 3rd damping control function.	B	Position, Full-closed	5.2.7
30	4th damping width setting	-	0 to 1000	2	Fine tune the 4th damping control function.	B	Position, Full-closed	5.2.7
31 to 37	For manufacturer's use	-	-	2	Permanently set at 0.	-	-	-

(Note 1) The value of the parameter itself will not be limited but the value to be applied will be limited within the driver. Attenuation term can be set at Pr 6.49 "Adjust/Torque command attenuation term".

9.1.4 Class 3: Velocity/ Torque/ Full-closed control

No.	Title	Unit	Range	Size [byte]	Function/Contents	Attribute	Related control mode	Reference
04	For manufacturer's use	-	-	2	Permanently set at 0.	-	-	-
05	For manufacturer's use	-	-	2	Permanently set at 0.	-	-	-
12	Acceleration time setup	ms/ (1000 r/min)	0 to 10000	2	Set the acceleration processing time in response to the velocity instruction input.	B	Velocity	4.3.3
13	Deceleration time setup	ms/ (1000 r/min)	0 to 10000	2	Set the deceleration processing time in response to the velocity instruction input.	B	Velocity	4.3.3
14	Sigmoid acceleration/ deceleration time setup	ms	0 to 1000	2	Set the S-curve time for acceleration/deceleration process when the velocity instruction is applied.	B	Velocity	4.3.3
17	Selection of speed limit	-	2	2	Set the speed limit	B	Torque	4.4.1
21	For manufacturer's use	-	-	2	Permanently set at 0.	-	-	-
22	For manufacturer's use	-	-	2	Permanently set at 0.	-	-	-
23	External scale selection	-	0 to 6	2	Select the type of external scale. 0: A,B phase output type 1: Serial communication type (incremental specification) 2: Serial communication type (absolute specification) 3 to 6: For manufacturer's use	R	All	4.8
24	Numerator of external scale division	-	0 to 2^{23}	4	Set up the numerator of the external scale dividing setup. When the set value = 0, the operation is performed with the encoder resolution used as the division numerator.	R	Full-closed	4.5.2
25	Denominator of external scale division	-	1 to 2^{23}	4	Set up the numerator of the external scale dividing setup.	R	Full-closed	4.5.2
26	Reversal of direction of external scale	-	0 to 3	2	When the set value = 0, the operation is performed with the encoder resolution used as the division numerator.	R	All	4.8
27	External scale Z phase disconnection detection disable	-	0 to 1	2	Validate/Invalidate Z-phase disconnection detection when using AB phase output type external scale. 0: Valid 1: Invalid	R	All	4.8
28	Hybrid deviation excess setup	Command unit	1 to 2^{27}	4	Set the threshold of Err.25.0 (Hybrid deviation excess error protection).	C	Full-closed	4.5.3 7.3
29	Hybrid deviation clear setup	Revolution	0 to 100	2	Clear hybrid deviation of each revolution setting to zero.	C	Full-closed	4.5.3

9.1.5 Class 4: I/O monitor setting

No.	Title	Unit	Range	Size [byte]	Function/Contents	Attribute	Related control mode	Reference
00	SI1 input selection	-	-2147483648 to 2147483647	4	Set function and logic of SI1.	C S	All	2.4.1
01	SI2 input selection	-	-2147483648 to 2147483647	4	Set function and logic of SI2.	C S	All	2.4.1
02	SI3 input selection	-	-2147483648 to 2147483647	4	Set function and logic of SI3.	C S	All	2.4.1
03	SI4 input selection	-	-2147483648 to 2147483647	4	Set function and logic of SI4.	C S	All	2.4.1
04	SI5 input selection	-	-2147483648 to 2147483647	4	Set function and logic of SI5.	C S	All	2.4.1
05	SI6 input selection	-	-2147483648 to 2147483647	4	Set function and logic of SI6.	C S	All	2.4.1
06	SI7 input selection	-	-2147483648 to 2147483647	4	Set function and logic of SI7.	C S	All	2.4.1
07	SI8 input selection	-	-2147483648 to 2147483647	4	Set function and logic of SI8.	C S	All	2.4.1
10	SO1 output selection	-	-2147483648 to 2147483647	4	Set SO1 function allocation.	C S	All	2.4.2
11	SO2 output selection	-	-2147483648 to 2147483647	4	Set SO2 function allocation.	C S	All	2.4.2
12	For manufacturer's use	-	-	4	Permanently set at 0.	-	-	-
16	For manufacturer's use	-	-	2	Permanently set at 0.	-	-	-
17	For manufacturer's use	-	-	4	Permanently set at 0.	-	-	-
18	For manufacturer's use	-	-	2	Permanently set at 0.	-	-	-
19	For manufacturer's use	-	-	4	Permanently set at 0.	-	-	-
21	For manufacturer's use	-	-	2	Permanently set at 0.	-	-	-
22	For manufacturer's use	-	-	2	Permanently set at 0.	-	-	-
23	For manufacturer's use	-	-	2	Permanently set at 0.	-	-	-
24	For manufacturer's use	-	-	2	Permanently set at 0.	-	-	-
31	Positioning complete (In-position) range	Command unit	0 to 2097152	4	Set allowable the number of pulses for positioning complete signal (INP). Unit is according to Pr5.20 "Position setup unit select".	A	Position, Full-closed	4.2.4
32	Positioning complete (In-position) output setup	-	0 to 10	2	Set the condition for positioning complete output.	A	Position, Full-closed	4.2.4

(To be continued)

No.	Title	Unit	Range	Size [byte]	Function/Contents	Attribute	Related control mode	Reference
33	INP hold time	ms	0 to 30000	2	Set the INP hold time	A	Position, Full-closed	4.2.4
34	Zero-speed	r/min	10 to 20000	2	Set threshold for zero speed (ZSP) detection.	A	All	2.4.2.2
35	Speed coincidence range	r/min	10 to 20000	2	Set the detection threshold of speed coincidence output (V-COIN) by the difference between the velocity command and the actual speed.	A	Velocity, Torque	4.3.2
36	At-speed (Speed arrival)	r/min	10 to 20000	2	Set the detection timing of the speed arrival output (AT-SPEED).	A	Velocity, Torque	4.3.1
37	Mechanical brake action at stalling setup	ms	0 to 10000	2	Set the mechanical brake operating time at stalling.	B	All	10.2
38	Mechanical brake action at running setup	ms	0 to 32000	2	Set the mechanical brake operating time at running.	B	All	6.3.7 8.4.1
39	Brake release speed setup	r/min	30 to 3000	2	Set the speed timing for judgement of mechanical brake output during operation.	B	All	8.4.1
40	Selection of alarm output 1	-	0 to 41 (Note 1)	2	Select the type of warning issued as the alarm output 1.	A	All	7.3
41	Selection of alarm output 2	-	0 to 41 (Note 1)	2	Select the type of warning issued as the alarm output 2.	A	All	7.3
42	Positioning complete (In-position) range 2	Command unit	0 to 2097152	4	Set the acceptable number of pulses for positioning complete signal 2 (INP2). Unit is according to Pr5.20 “Position setup unit select”.	A	Position, Full-closed	4.2.4
44	Position comparison output pulse width setting	0.1ms	0 to 32767	2	Set the pulse width of the signal that is output for position comparison. The signal is not output when 0 is set.	R	All	6.5
45	Position comparison output polarity selection	-	0 to 7	2	Set the polarity of position comparison output by bit setup for each output terminal. • Setup bits bit0: SO1,COMP1 bit1: SO2,COMP2 • Setup values of each setting bit 0: The output photocoupler is turned ON for SO1 to 2 and is set to L level for COMP1 to 2, respectively, during pulse output. 1: The output photocoupler is turned OFF for SO1 to 2 and is set to H level for COMP1 to 2, respectively, during pulse output. Basically, use this function as 0.	R	All	6.5
47	Pulse output selection	-	0 to 1	2	Set 1 to use the position comparison output signal (COMP1/COMP2). 0: Position comparison invalid 1: Position comparison valid	R	All	4.2.5 6.5

(Note 1) When the software version is first edition, the setting range is 0 to 40.

(To be continued)

No.	Title	Unit	Range	Size [byte]	Function/Contents	Attribute	Related control mode	Reference
48	Position comparison value 1	Command unit	-2147483648 to 2147483647	4	Set the comparison value for position comparison output 1.	A	All	6.5
49	Position comparison value 2	Command unit	-2147483648 to 2147483647	4	Set the comparison value for position comparison output 2.	A	All	6.5
50	Position comparison value 3	Command unit	-2147483648 to 2147483647	4	Set the comparison value for position comparison output 3.	A	All	6.5
51	Position comparison value 4	Command unit	-2147483648 to 2147483647	4	Set the comparison value for position comparison output 4.	A	All	6.5
52	Position comparison value 5	Command unit	-2147483648 to 2147483647	4	Set the comparison value for position comparison output 5.	A	All	6.5
53	Position comparison value 6	Command unit	-2147483648 to 2147483647	4	Set the comparison value for position comparison output 6.	A	All	6.5
54	Position comparison value 7	Command unit	-2147483648 to 2147483647	4	Set the comparison value for position comparison output 7.	A	All	6.5
55	Position comparison value 8	Command unit	-2147483648 to 2147483647	4	Set the comparison value for position comparison output 8.	A	All	6.5
56	Position comparison output delay compensation amount	0.1us	-32768 to 32767	2	Compensate the delay in the position comparison output signaled by the circuit.	R	All	6.5
57	Position comparison output assignment setting	-	-2147483648 to 2147483647	4	Set the output terminals corresponding to position comparison values 1 to 8 by bit setup. Multiple position comparison values can be set up on one output terminal. • Setup bits bit0-3: Position comparison output 1 bit4-7: Position comparison output 2 bit8-11:Position comparison output 3 bit12-15:Position comparison output 4 bit16-19:Position comparison output 5 bit20-23:Position comparison output 6 bit24-27:Position comparison output 7 bit28-31:Position comparison output 8 • Setup values of each setting bit 0000b:Output disabled 0001b:Assigned to SO1,COMP1 0010b:Assigned to SO2,COMP2 Other than above: For manufacturer's use(Do not set.)	R	All	6.5

(To be continued)

No.	Title	Unit	Range	Size [byte]	Function/Contents	Attribute	Related control mode	Reference
59	Mechanical brake signal setup	-	0 to 2	2	Sets the mechanical brake signal which is output from the mechanical brake output (BRK+/-). 0: BRK-OFF 1: set brake 2: BRK-OFF or set brake	B	All	2.2

9.1.6 Class 5: Enhancing setting

No.	Title	Unit	Range	Size [byte]	Function/Contents	Attribute	Related control mode	Reference
03	For manufacturer's use	-	-	4	Permanently set at 0.	-	-	-
04	Over-travel inhibit input setup	-	0 to 3	2	Set the operation of the inhibit positive/ negative direction travel inputs.	C	All	6.3.1 7.4 7.5
05	Sequence at over-travel inhibit	-	0 to 2	2	Set the sequence when over-travel inhibit is input.	C	All	6.3.1 7.4
06	Sequence at Servo-Off	-	0 to 9	2	Set the sequence while servo is OFF.	B	All	6.3.2
07	Sequence upon main power off	-	0 to 9	2	Set the sequence while main AC power is OFF.	B	All	6.3.3
08	L/V trip selection upon main power off	-	0 to 3	2	Select L/V trip or servo OFF upon occurrence of main AC power alarm. It also sets the condition for main power off warning detection when the main power off condition continues for the time set up in PSM or longer. bit0: 0: The servo off according to the setting of 6007h/6807h(Abort connection option code) or Pr5.07. 1: Trip with Err 13.1 Main power undervoltage protection. bit1: 0: Detect main AC power OFF alarm only when servo is in ON state. 1: Always detect main AC power OFF alarm.	B	All	6.3.3
09	For manufacturer's use	-	-	2	Permanently set at 2000.	-	-	-
10	Sequence at alarm	-	0 to 7	2	Set the sequence used upon occurrence of an alarm.	B	All	6.3.4 6.3.5 6.3.6
11	Torque setup for emergency stop	%	0 to 500	2	Set up the torque limit at emergency stop. When setup value is 0, the torque limit for normal operation is applied.	B	All	6.3.1 6.3.2 6.3.3 6.3.5
12	Over-load level setup	%	0 to 500	2	You can set up the over-load level. It becomes 115% by setting up this to 0. The setup value of this parameter is limited by 115% of the motor rating.	A	All	-
13	Over-speed level setup	r/min	0 to 20000	2	Set up the detection level of Err.26.0 Over-speed protection.If the motor speed exceeds this setup value, Err26.0 "Over-speed Protection" occurs.When the setting value is 0, the over-speed level becomes the over-speed protection level.The internal value is limited to the over-speed level of applicable motor.(Note 1)	B	All	6.3.5 7.4

(Note 1) Except some motors

(To be continued)

No.	Title	Unit	Range	Size [byte]	Function/Contents	Attribute	Related control mode	Reference
14	Motor working range setup	0.1 rot	0 to 1000	2	You can set up the movable range of the motor against the position command input range. When the motor movement exceeds the setup value, Err34.0 "software limit protection" will be triggered. When set value of this parameter is 0, Err34.0 become disable. Also in condisions written in section "6.2 Motor working range setup function" - "Cautions", Err34.0 become disable.	A	Position, Full-closed	6.2 7.4
15	Control input signal reading setup	-	0 to 3	2	Set up a read signal for cycle of the control input. 0:0.250ms,1:0.500ms,2:1.000ms,3: 2.000ms However, the following are exceptions. • When using POT/NOT/HOME as the home position reference trigger • The external latch input1/2(EXT1/2) Note Read cycle differs from MINAS-A5B series.	C S	All	-
16	For manufacturer's use	-	-	2	Permanently set at 1.	-	-	-
20	Position setup unit select	-	0 to 1	2	Specify the unit to determine the range of positioning complete and excessive positional deviation. 0: Command unit 1: Encoder unit (External scale unit) Note Positioning complete(6041h bit10 [Target reached]) detection threshold of EtherCAT communication status is always command unit regardless of the setting of this parameter.	C	Position, Full-closed	4.2.4 7.4
21	Selection of torque limit	-	0 to 5	2	Select positive direction or negative direction torque limit. When 0 is set, 1 will be internally set.	B	All	6.1
22	2nd torque limit	%	0 to 500	2	You can set up the 2nd limit value of the motor output torque. The value of parameter is limited to the maximum torque of the applicable motor.	B	Position, Velocity, Full-closed	6.1
25	For manufacturer's use	-	-	2	Permanently set at 0.	-	-	-
26	For manufacturer's use	-	-	2	Permanently set at 0.	-	-	-
29	For manufacturer's use	-	-	2	Permanently set at 2.	-	-	-
31	For manufacturer's use	-	-	2	Permanently set at 1.	-	-	-
33	For manufacturer's use	-	-	2	Permanently set at 0.	-	-	-
34	For manufacturer's use	-	-	2	Permanently set at 4.	-	-	-
36	For manufacturer's use	-	-	2	Permanently set at 0.	-	-	-

(To be continued)

No.	Title	Unit	Range	Size [byte]	Function/Contents	Attribute	Related control mode	Reference
45	Quadrant glitch positive-direction compensation value	0.1%	-1000 to 1000	2	Set the positive-direction high-precision torque compensation value for quadrant glitches.	B	Position, Full-closed	5.2.15
46	Quadrant glitch negative-direction compensation value	0.1%	-1000 to 1000	2	Set the negative-direction high-precision torque compensation value for quadrant glitches.	B	Position, Full-closed	5.2.15
47	Quadrant glitch compensation delay time	ms	0 to 1000	2	Set the compensation timing delay time for quadrant glitches.	B	Position, Full-closed	5.2.15
48	Quadrant glitch compensation filter setting L	0.01 ms	0 to 6400	2	Set the compensation value LPF time constant for quadrant glitches.	B	Position, Full-closed	5.2.15
49	Quadrant glitch compensation filter setting H	0.1 ms	0 to 10000	2	Set the compensation value HPF time constant for quadrant glitches.	B	Position, Full-closed	5.2.15
50	For manufacturer's use	-	-	4	Permanently set at 0.	-	-	-
51	For manufacturer's use	-	-	4	Permanently set at 0.	-	-	-
52	For manufacturer's use	-	-	4	Permanently set at 0.	-	-	-
53	For manufacturer's use	-	-	4	Permanently set at 0.	-	-	-
54	For manufacturer's use	-	-	4	Permanently set at 0.	-	-	-
55	For manufacturer's use	-	-	4	Permanently set at 0.	-	-	-
56	Slow stop deceleration time setting	ms/ (1000r/min)	0 to 10000	2	Sets the deceleration time under slow stop. This function will become effective when Pr6.10 "Function expansion setup" bit 15 is set to 1.	B	Position, Velocity, Torque	6.3.7
57	Slow stop S-shape acceleration and deceleration setting	ms	0 to 1000	2	Sets the S-shape time for deceleration under slow stop. This function will become effective when Pr6.10 "Function expansion setup" bit 15 is set to 1.	B	Position, Velocity, Torque	6.3.7
66	Deterioration diagnosis convergence judgment time	0.1s	0 to 10000	2	Sets time for deemed convergence of Real-time auto tuning load characteristics estimate when deterioration diagnosis warning function is valid (Pr6.97 bit 1 = 1) When the set value is 0, it will be set automatically inside the driver in accordance with Pr6.31 "Real time auto tuning estimation speed". Note When Pr6.31 "Real time auto tuning estimation speed" = 0, the deterioration diagnosis warning judgment for load characteristics estimate will be invalid.	A	All	6.8

(To be continued)

No.	Title	Unit	Range	Size [byte]	Function/Contents	Attribute	Related control mode	Reference
67	Deterioration diagnosis inertia ratio upper limit	%	0 to 10000	2	Sets the upper and lower limit values for inertia ratio estimate in deterioration diagnosis judgment of load characteristics estimate after completion of convergence, when deterioration diagnosis warning is valid (Pr6.97 bit 1 = 1). Note • When the upper limit value is set at 10000 (max. value), judgment of the upper limit becomes invalid. • When the lower limit value is set at 0 (min. value), judgment of the lower limit becomes invalid. • If Pr5.67 (upper limit) ≤ Pr5.68 (lower limit), judgment of both the upper limit and lower limit becomes invalid. • The set resolution shall be in units of 0.2%.	A	All	6.8
68	Deterioration diagnosis inertia ratio lower limit	%	0 to 10000	2		A	All	6.8
69	Deterioration diagnosis unbalanced load upper limit	0.1%	-1000 to 1000	2	Sets the upper and lower limit values for unbalanced load estimate in deterioration diagnosis judgment of load characteristics estimate after completion of convergence, when deterioration diagnosis warning is valid (Pr6.97 bit 1 = 1). Note • When the upper limit value is set at 1000 (max. value), judgment of the upper limit becomes invalid. • When the lower limit value is set at -1000 (min. value), judgment of the lower limit becomes invalid. • If Pr5.69 (upper limit) ≤ Pr5.70 (lower limit), judgment of both the upper limit and lower limit becomes invalid. • The set resolution shall be in units of 0.2%.	A	All	6.8
70	Deterioration diagnosis unbalanced load lower limit	0.1%	-1000 to 1000	2		A	All	6.8
71	Deterioration diagnosis dynamic friction upper limit	0.1%	-1000 to 1000	2	Sets the upper and lower limit values for dynamic friction estimate in deterioration diagnosis judgment of load characteristics estimate after completion of convergence, when deterioration diagnosis warning is valid (Pr6.97 bit 1 = 1). Note • When the upper limit value is set at 1000 (max. value), judgment of the upper limit becomes invalid. • When the lower limit value is set at -1000 (min. value), judgment of the lower limit becomes invalid. • If Pr5.71 (upper limit) ≤ Pr5.72 (lower limit), judgment of both the upper limit and lower limit becomes invalid. • The set resolution shall be in units of 0.2%.	A	All	6.8
72	Deterioration diagnosis dynamic friction lower limit	0.1%	-1000 to 1000	2		A	All	6.8

(To be continued)

No.	Title	Unit	Range	Size [byte]	Function/Contents	Attribute	Related control mode	Reference
73	Deterioration diagnosis viscous friction upper limit	0.1%/(10000r/min)	0 to 10000	2	Sets the upper and lower limit values for viscous friction coefficient estimate in deterioration diagnosis judgment of load characteristics estimate after completion of convergence, when deterioration diagnosis warning is valid (Pr6.97 bit 1 = 1). Note • When the upper limit value is set at 10000 (max. value), judgment of the upper limit becomes invalid. • When the lower limit value is set at 0 (min. value), judgment of the lower limit becomes invalid. • If Pr5.73 (upper limit) ≤ Pr5.74 (lower limit), judgment of both the upper limit and lower limit becomes invalid. • The set resolution shall be in units of 0.2%.	A	All	6.8
74	Deterioration diagnosis viscous friction lower limit	0.1%/(10000r/min)	0 to 10000	2		A	All	6.8
75	Deterioration diagnosis velocity setting	r/min	-20000 to 20000	2	Outputs deterioration diagnosis velocity output (V-DIAG) when the motor velocity is in the range of Pr5.75±Pr4.35 (velocity coinciding width), when deterioration diagnosis warning is valid (Pr6.97 bit 1 =1) Note • Deterioration diagnosis velocity output has a 10 [r/min] hysteresis.	A	All	6.8
76	Deterioration diagnosis torque average time	ms	0 to 10000	2	Sets time required to compute the torque command average (weighted frequency) when deterioration diagnosis warning is valid (Pr6.97 bit 1 = 1) and diagnosis velocity output (V-DIAG) is ON. Note • Time from diagnosis velocity output (V-DIAG) ON to the start judgment for upper and lower value of torque command average value is also a part of the set time for this parameter. • If the setting value is 0, the torque command average value is not calculated.	A	All	6.8
77	Deterioration diagnosis torque upper limit	0.1%	-1000 to 1000	2	Sets the upper and lower limit values for torque command average value when deterioration diagnosis warning is valid (Pr6.97 bit 1 = 1) and deterioration diagnosis velocity output (V-DIAG) is ON Note • When the upper limit value is set at 1000 (max. value), judgment of the upper limit becomes invalid. • When the lower limit value is set at -1000 (min. value), judgment of the lower limit becomes invalid. • If Pr5.77 (upper limit) ≤ Pr5.78 (lower limit), judgment of both the upper limit and lower limit becomes invalid.	A	All	6.8
78	Deterioration diagnosis torque lower limit	0.1%	-1000 to 1000	2		A	All	6.8

(To be continued)

No.	Title	Unit	Range	Size [byte]	Function/Contents	Attribute	Related control mode	Reference
88	Function extended shared setup 1	-	-	4	Permanently set at 0.	-	-	-
89	Function extended shared setup 2	-	-	4	Permanently set at 0.	-	-	-
90	Function extended shared setup 3	-	-2147483648 to 214748364	4	Sets up permission/prohibition of various functions. (enabled after reset) bit0: Mechanical brake circuit overvoltage protection function 0: Enabled 1: Disabled	R S	All	-

9.1.7 Class 6: Special setting

No.	Title	Unit	Range	Size [byte]	Function/Contents	Attribute	Related control mode	Reference
02	Speed deviation excess setup	r/min	0 to 20000	2	Set threshold of Err 24.1 Speed over deviation protection. This protection is not detected when the setup value is 0.	A	Position	-
05	Position 3rd gain valid time	0.1 ms	0 to 10000	2	Set up 3rd gain valid time of 3 gain level adjustment.	B	Position, Full-closed	5.2.11
06	Position 3rd gain scale factor	%	50 to 1000	2	Set up the 3rd gain by a multiplying factor of the 1st gain	B	Position, Full-closed	5.2.11
07	Torque command additional value	%	-100 to 100	2	Set up the offset torque to be added to the torque command.	B	Position, Velocity, Full-closed	5.2.12
08	Positive direction torque compensation value	%	-100 to 100	2	Set up the value to be added to the torque command for positive direction operation.	B	Position, Full-closed	5.2.12
09	Negative direction torque compensation value	%	-100 to 100	2	Set up the value to be added to the torque command for negative direction operation.	B	Position, Full-closed	5.2.12
10	Function expansion setup	-	-32768 to 32768	2	Set up the function in unit of bit. bit0: unused. Always set to 0. bit1: Load variation suppression function 0: Invalid 1: Valid bit2: Load variation stabilization setting 0: Invalid 1: Valid bit3: For manufacturer's use. Always se to 0 bit4: Current response improvement 0: Invalid 1: Valid bit5: For manufacturer's use. Always se to 0. bit6 to 8: unused. Always set to 0. bit9: For manufacturer's use. Always set to 1. bit10: Fall prevention function in case of alarms 0: Invalid 1: Valid bit11: Encoder overheat error protection detection 0: Invalid 1: Valid (Note 1) bit12: unused. Always set to 0 bit13: For manufacturer's use. Always set to 0. bit14: Load variation suppression function automatic setting 0: Invalid 1: Valid (Note 2) bit15: Slow stop function 0: Invalid 1: Valid * bit 0 is the least significant bit.	B	All	5.1.1 5.1.3 5.1.4 5.2.10 6.3.6 6.3.7

(Note 1) When an encoder overheat warning occurs, Err15.1 "Encoder overheat error protection" also occurs concurrently.
(Note 2) When bit14 to 1, it will be bit1 and 2 also 1.
(To be continued)

No.	Title	Unit	Range	Size [byte]	Function/Contents	Attribute	Related control mode	Reference
11	Current response setup	%	10 to 300	2	Adjust the current response with the level set at shipment as 100%. In principle, specify 100 for this setting and adjust the position/velocity gain. While the response can be improved by setting this value to a value larger than 100 when it is wished that the servo response is further improved, it may also result in a tendency for vibration and noise generation. Adjust it to an appropriate value depending on the operating conditions of the applied device in a similar fashion to the adjustment of position/velocity gain. The maximum value which can be set varies by the type of motor connected, and the maximum value is limited to 100% for some of the motors.	B	all	-
14	Emergency stop time at alarm	ms	0 to 1000	2	Set up the time allowed to complete emergency stop in an alarm condition.	B	All	6.3.5 6.3.7
15	2nd over-speed level setup	r/min	0 to 20000	2	Set up the detection level of Err.26.1 2nd over-speed protection. If the motor speed exceeds this setup value, Err26.1 “2nd over-speed protection” occurs. When the setting value is 0, the over-speed level becomes the over-speed protection level.The internal value is limited to the over-speed level of applicable motor.(Note 1)	B	All	6.3.5
18	Power-up wait time	0.1 s	0 to 100	2	Set up the standard initialization time approx. 1.5 s + α (setting value x 0.1s) after power-up. For example, in the case of the preset value 10, it is set to 1.5s+(10×0.1 s) = approx. 2.5s. Note If the period until LINK establishment is too long, it may be possible to improve this phenomenon by setting different values in the Pr6.18 for adjacent driver modules (such as 0.0 s and 0.1 s). Note If error F8301/F8302 is detected from the safety part after turning on the power, the phenomenon may be improved by reducing the value of Pr6.18.	R S	All	3.3
19	For manufacturer’s use	-	-	2	Permanently set at 0.	-	-	-
20	For manufacturer’s use	-	-	2	Permanently set at 0.	-	-	-
21	For manufacturer’s use	-	-	4	Permanently set at 0.	-	-	-
22	For manufacturer’s use	-	-	2	Permanently set at 0.	-	-	-
23	Load change compensation gain	%	-100 to 100	2	Set the compensation gain for a load change.	B	Position, Velocity, Full-closed	5.2.10
24	Load change compensation filter	0.01 ms	10 to 2500	2	Set the compensation gain for a load change.	B	Position, Velocity, Full-closed	5.2.10

(Note 1) Except some motors

(To be continued)

No.	Title	Unit	Range	Size [byte]	Function/Contents	Attribute	Related control mode	Reference
27	Warning latch state setup	-	0 to 3	2	Determine whether to latch warning state. General warning and Extended warning can be specified. bit 0: Extended warning 0: unlatched 1: latched bit 1: General warning 0: unlatched 1: latched	C S	All	7.3
30	For manufacturer's use	-	-	2	Permanently set at 0.	-	-	-
31	Real time auto tuning estimation speed	-	0 to 3	2	Set up the load characteristics estimation speed with the Real-time auto tuning being valid.	B	All	5.1.1 5.1.3 5.1.4
32	Real time auto tuning custom setup	-	-32768 to 32767	2	Set up details of Real-time auto tuning customize mode.	B	All	5.1.1 5.1.3 5.1.4
34	Hybrid vibration suppression gain	0.1/s	0 to 30000	2	Set up the hybrid vibration suppression gain for full-closed controlling.	B	Full-closed	5.2.13
35	Hybrid vibration suppression filter	0.01 ms	0 to 32000	2	Set up the time constant of the hybrid vibration suppression filter for full-closed controlling.	B	Full-closed	5.2.13
36	Dynamic brake operation input setup	-	0 to 1	2	Set enable or disable dynamic brake (DB) operation input by I/O. 0: Disabled 1: Enabled Note This function is available only when the main power is turned off.	R	All	6.3.3
37	Oscillation detecting level	0.1%	0 to 1000	2	Set up the oscillation detecting level. Upon detection of a torque vibration whose level is higher than this setup value, the oscillation detection alarm will be issued. If set to 0, oscillation detection warning is disabled.	B	All	7.3
38	Alarm mask setup	-	-32768 to 32767	2	Set up the alarm detection mask. Placing 1 to the corresponding bit position disables detection of the alarm condition.	R	All	7.3
39	Alarm mask setup2	-	-32768 to 32767	2		C	All	7.3
41	1st damping depth	-	0 to 1000	2	Specifies the damping depth of the 1st damping function.	B	Position, Full-closed	5.2.7
42	2-stage torque filter time constant	0.01 ms	0 to 2500	2	Specifies the filter time constant for the torque command. The filter is disabled if the setting value is 0. This setting remains valid irrespective of gain selection state.	B	All	5.2.14
43	2-stage torque filter attenuation term	-	0 to 1000	2	Specifies the attenuation term of the 2-stage torque filter.	B	All	5.2.14

(To be continued)

No.	Title	Unit	Range	Size [byte]	Function/Contents	Attribute	Related control mode	Reference
47	Function expansion setup2	–	-32768 to 32767	2	Set respective functions in unit of bit. bit0: 2 degrees of freedom control mode 0:Invalid 1: Valid bit1: For manufacturer's use Permanently set at 0 bit2: Encoder communication error / warning decision setting 0: Standard specification 1: Relaxation specification bit3: Selection of real-time auto-tuning type at 2 degrees of freedom control 0: Standard type 1: Synchronization type bit4 to 7: Not used Permanently set at 0. bit8: For manufacturer's use Permanently set at 0. bit9 to 11: Not used Permanently set at 0. bit12 to 13: For manufacturer's use Permanently set at 0. bit14: Quadrant glitch inhibit function 0: Invalid 1: Valid bit15: Not used Permanently set at 0. Note • The least significant bit is bit0. • Bit3 can be used only when bit0 is set to 1 Refer to For details on the types, see "5.1.3 Real-time auto tuning (Two-degree-of-freedom control mode standard type)" and "5.1.4 Real-time auto tuning (Two-degree-of-freedom control mode synchronization type)".	R	All	5.2.15 5.2.16 5.2.17 5.2.18
48	Tuning filter	0.1ms	0 to 2000	2	Set the time constant for the tuning filter in 2 degrees of freedom control.	B	Position, Velocity, Full-closed	5.2.16 5.2.17 5.2.18

(To be continued)

No.	Title	Unit	Range	Size [byte]	Function/Contents	Attribute	Related control mode	Reference
49	Command / tuning filter damping	–	0 to 99	2	Set the attenuation term for the command filter and tuning filter in 2 degrees of freedom control. A decimal number indication is used. The first digit sets the command filter and the second digit sets the tuning filter. Target digit 0 to 4: No attenuation term, ζ (operated as primary filter) 5 to 9: Secondary filter (Attenuation terms will be 1.0, 0.86, 0.71, 0.50, and 0.35 in order.) Example) To set the command filter to ζ=1.0 and tuning filter 1 to ζ=0.71, the setting value should be 75 (first digit=5 (ζ=1.0), second digit=7 (ζ=0.71)). For the time constant of the command filter, Pr2.22 "Positional command smoothing filter" will be applied.	B	Position, Full-closed	5.2.16 5.2.18
50	Viscous friction compensating gain	0.1%/ (10000r/min)	0 to 10000	2	The command velocity is multiplied by this setting value, which becomes a correction amount added to the torque command. The unit is [rated torque 0.1%/ (10000 r/min)].	B	Position, Velocity, Full-closed	5.2.16 5.2.17 5.2.18
51	Wait time for emergency stop	ms	0 to 10000	2	Set the time to maintain the motor energization after the brake release output (BRK-OFF) is turned OFF in the event of an alarm requiring emergency stop. Note Enabled even when Pr6.10 "Function expansion setup" is set to a value other than bit10=1.	B	All	6.3.6
52	For manufacturer's use	-	-	2	Permanently set at 0.	-	-	-
53	For manufacturer's use	-	-	2	Permanently set at 0.	-	-	-
54	For manufacturer's use	-	-	2	Permanently set at 0.	-	-	-
57	Torque saturation error protection detection time	ms	0 to 5000	2	Set the torque saturation error protection detection time. If torque saturation continues for the set time or more, Err16.1 "torque saturation error protection" occurs. When 0 is set, the value set for Pr7.16 is enabled.	B	Position, Velocity, Full-closed	6.4
58	For manufacturer's use	-	-	4	Permanently set at 0.	-	-	-
59	For manufacturer's use	-	-	2	Permanently set at 0.	-	-	-
60	2nd damping depth	-	0 to 1000	2	Set the damping depth for the 2nd damping function.	B	Position, Full-closed	5.2.7
61	For manufacturer's use	-	-	2	Permanently set at 0.	-	-	-
62	For manufacturer's use	-	-	2	Permanently set at 0.	-	-	-
63	For manufacturer's use	-	-	2	Permanently set at 0.	-	-	-

(To be continued)

No.	Title	Unit	Range	Size [byte]	Function/Contents	Attribute	Related control mode	Reference
64	For manufacturer's use	-	-	2	Permanently set at 0.	-	-	-
65	For manufacturer's use	-	-	2	Permanently set at 0.	-	-	-
66	For manufacturer's use	-	-	2	Permanently set at 0.	-	-	-
67	For manufacturer's use	-	-	2	Permanently set at 0.	-	-	-
68	For manufacturer's use	-	-	2	Permanently set at 0.	-	-	-
69	For manufacturer's use	-	-	2	Permanently set at 0.	-	-	-
70	For manufacturer's use	-	-	2	Permanently set at 0.	-	-	-
71	3rd damping depth	-	0 to 1000	2	Set the damping depth for the 3rd damping function.	B	Position, Full-closed	5.2.7
72	4th damping depth	-	0 to 1000	2	Set the damping depth for the 4th damping function.	B	Position, Full-closed	5.2.7
73	Load estimation filter	0.01 ms	0 to 2500	2	Set the filter time constant for load estimation.	B	Position, Velocity, Full-closed	5.2.10
74	Torque compensation frequency 1	0.1 Hz	0 to 5000	2	Set the filter frequency 1 for speed control output.	B	Position, Velocity, Full-closed	5.2.10
75	Torque compensation frequency 2	0.1 Hz	0 to 5000	2	Set the filter frequency 2 for speed control output.	b	Position, Velocity, Full-closed	5.2.10
76	Load estimation count	-	0 to 8	2	Set the number of times regarding load estimation.	B	Position, Velocity, Full-closed	5.2.10
85	For manufacturer's use (Retracting operation condition setting)	-	-	2	Permanently set at 0.	-	-	-
86	For manufacturer's use	-	-	2	Permanently set at 0.	-	-	-
87	For manufacturer's use	-	-	4	Permanently set at 0.	-	-	-
88	Absolute encoder multi-turn data upper-limit value	-	0 to 65534	4	Set the upper-limit value for absolute encoder multi-turn data when Pr0.15 is set to 4. If multi-turn data exceeds the set value, the multi-turn data changes to 0 instead of the set value. When the multi-turn data falls below 0, multi-turn data will change to the set value. When set to Pr0.15 = 0 or 2(absolute mode), the upper limit of the absolute rotation data becomes 65535, regardless of this setting. This setting will become invalid when Pr0.15 is set to 1 or 3.	C	All	6.7

(To be continued)

No.	Title	Unit	Range	Size [byte]	Function/Contents	Attribute	Related control mode	Reference
95	Over-load warning detection level	%	0 to 114	2	Sets the threshold value for detecting the warning as the overload load factor increases. Sets with the overload load factor. If 0 is set, overload warning detection is performed under conventional conditions (85% of overload protection level). In addition, if other than "Pr6.96 <= Pr6.95 < (Overload level)" is set, overload warning detection is performed under conventional conditions (85% of overload level).	A	All	7.3
96	Over-load warning release level	%	0 to 114	2	Sets the threshold value for releasing the warning when the load factor decreases from the state when the overload warning is occurring. Sets with the overload load factor. If 0 is set, overload warning detection is performed under conventional conditions (85% of overload protection level). In addition, if other than “Pr6.96 <= Pr6.95 < (Overload level)” is set, overload warning detection is performed under conventional conditions (85% of overload protection level).	A	All	7.3
97	Function expansion setup 3	-	-2147483648 to 2147483647	4	Set various functions on a bit basis. bit0: Enables/Disables quadrant projection compensation function extended. 0: Disabled 1: Enabled * To set the compensation amount of quadrant projection by inversion direction when the direction of the velocity has changed, set Pr6.97 bit0 to 1. bit1: Deterioration diagnosis warning function: 0: Disabled 1: Enabled bit2: Expansion of Allowable motor operating range abnormal protection: 0: Disabled 1: Enabled bit3 to 7: For manufacture use. Permanently set at 0. bit8: Extension of the subject control mode for 607Fh/687Fh (Max profile velocity). 0: standard specifications (pp,hm,ip,pv) 1: expansion specification (pp,hm,ip,pv,tq,cst) bit9 to 31: For manufacture use. Permanently set at 0. Note bit 0 is the least significant bit.	B	All	4.5.4 5.2.15 6.2 6.8 Ether CAT

(To be continued)

No.	Title	Unit	Range	Size [byte]	Function/Contents	Attribute	Related control mode	Reference
98	Function expansion setup 4	-	-2147483648 to 2147483647	4	Sets various function in bit units: bit0-2: For manufacture use. Permanently set at 0. bit3: Effective bit setting of Multi-turn data. 0:16bit 1: 9bit bit4 to 7: For manufacture use. Permanently set at 0. bit8: Control mode switching function expansion 0: Conventional specification 1: hm operation expansion specification bit9 to 19: For manufacture use. Please set fixed to 0 bit20: Mechanical brake circuit overload protection function 0: Valid1 1: Invalid bit21 to 31: For manufacture use. Permanently set at 0. Note bit 0 is the least significant bit.	R	All	-
101	For manufacturer's use	-	-	2	Permanently set at 0.	-	-	-

9.1.8 Class 7: Special setting2

No.	Title	Unit	Range	Size [byte]	Function/Contents	Attribute	Related control mode	Reference
00	Display on LED	-	0 to 32767	2	Select type of data displayed on front panel 7-seg LED.	A S	All	3.2
01	Display time setup upon power-up	100 ms	0 to 1000	2	Sets Station alias (Lower) display time upon turning the control power ON. When the setting value is 0 to 6, it is processed in 600 ms.	R S	All	3.5.1
03	Output setup during torque limit	-	0 to 1	2	Set up judgment condition of output while torque is limited by torque control. 0: Turn ON at torque limit including torque command value 1: Turn ON at torque limit excluding torque command value	A	Torque	-
04	For manufacturer's use	-	-	2	Permanently set at 0.	-	-	-
05	For manufacturer's use	-	-	4	Permanently set at 0.	-	-	-
06	For manufacturer's use	-	-	2	Permanently set at 0.	-	-	-
07	For manufacturer's use	-	-	2	Permanently set at 0.	-	-	-
08	For manufacturer's use	-	-	2	Permanently set at 0.	-	-	-
09	Correction time of latch delay 1	25 ns	-2000 to 2000	2	Set the correction time for delay of the latch trigger signal detection. This parameter can be switched by Pr7.24 bit5. 0: The correction time is reflected in both the latch signal rising edge detection and the latch signal falling edge detection. 1: The correction time is reflected in the latch signal rising edge detection. Note Signal state of edge detection means the following - The rising edge detection means the photocoupler is turned ON. - The falling edge detection means the photocoupler is turned OFF.	B	All	EtherCAT Spec.
10	For manufacturer's use	-	-	2	Permanently set at 0.	-	-	-
11	For manufacturer's use	-	-	4	Permanently set at 0.	-	-	-
12	For manufacturer's use	-	-	4	Permanently set at 0.	-	-	-
13	For manufacturer's use	-	-	4	Permanently set at 0.	-	-	-
14	For manufacturer's use	-	-	2	Permanently set at 0.	-	-	-
15	For manufacturer's use	-	-	4	Permanently set at 0.	-	-	-

(To be continued)

No.	Title	Unit	Range	Size [byte]	Function/Contents	Attribute	Related control mode	Reference
16	Torque saturation error protection frequency	time	0 to 30000	2	If torque saturated is continued during a preset frequency, Err 16.1 "Torque saturation protection" will be activated. The number of times is counted up every 0.25 ms. For example, when 30000 is set, Err16.1 occurs if the torque saturation condition continues for 7.5 seconds. The count is cleared when the torque saturation condition is removed. When the value set for Pr6.57 is other than 0, the value set for Pr6.57 is enabled.	B	Position, Velocity, Full-closed	6.4
22	Communication function extended setup 1	-	-32768 to 32767	2	bit0 to 4: For manufacturer's use All bits permanently set at 0. bit5: 6080h/6880h(Max motor speed) on csp mode (Amount of change saturation function of command position) 0: Invalid on csp 1: Valid on csp bit6: Homing return speed limit function enabled 0: Invalid 1: Valid bit 7: In Z phase homing Over-travel inhibit input setup 0: Invalid 1: Valid bit 8 to 10: For manufacturer's use All bits permanently set at 0. bit 11 to 15: For manufacturer's use All bits permanently set at Note Set up the properly according to the specifications of the host controller. If the setting is not proper, the operation is not be guaranteed.	R	All	4.8
23	Communication function extended setup 2	-	-32768 to 32767	2	bit0 to 13: For manufacturer's use All bits permanently set at 0. bit14: Command positional deviation [Command unit] output setting 0: Internal command position (after filter) [Command unit] - Actual position [command unit] 1: Internal command position (before filter) [Command unit] - Actual position [Command unit]	B	All	3.4

(To be continued)

No.	Title	Unit	Range	Size [byte]	Function/Contents	Attribute	Related control mode	Reference
24	Communication function extended setup 3	-	-32768 to 32767	2	bit0: EX-OUT1 output status setting when communication is cut off after establishing EtherCAT communication. 0: Hold 1: Initialization bit1 to 3: For manufacturer's use Permanently set at 0. bit4: For manufacturer's use Permanently set at 1. bit5: The correction function for detection delay of latch position. 0: The correction time of both the latch signal rising edge detection and the latch signal falling edge detection is set by Pr7.09 1: The correction time of the latch signal rising edge detection is set by Pr7.09, the correction time of the latch signal falling edge detection is set by Pr7.92. bit6: For manufacturer's use Permanently set at 0. bit7: Internal value state selection of objects 60B2h/68B2h (Torque offset) in servo-off(Fall prevention function in the event of Servo-ON) 0: Clear 1: Updated with the set value of 60B2h/68B2h *When this setting value is set to 1, set the value of 60B2h / 68B2h (Torque offset) to a value smaller than the value of Pr5.11 "Torque setup for emergency stop". bit8 to 10: For manufacturer's use Permanently set at 0. bit11: The setting condition of 6041h/6841h bit12(drive follows command value). 0: Limiting torque and speed limit (only cst) is included. 1: Limiting torque and speed limit (only cst) is not included. bit12 to 13: For manufacturer's use Permanently set at 1.	C	All	2.2 6.3.6 EtherCAT Spec.
39	For manufacturer's use	-	-	2	Permanently set at 0.	-	-	-
40	Station Alias setup (high)	-	0 to 255	2	Define the higher 8 bits of station alias.	R S	All	EtherCAT Spec.
41	Station alias selection	-	0 to 2	2	Select the setting origin of a station alias. 0: RSW(lower)+Pr7.40(higher) 1: SII 2: For manufacturer's use	R S	All	EtherCAT Spec.

(To be continued)

No.	Title	Unit	Range	Size [byte]	Function/Contents	Attribute	Related control mode	Reference
42	Maximum continuation communication error	-	-32768 to 32767	2	Set up the maximum of times of continuation communication error occurrence. bit0 to 3: Err80.7 detection threshold bit4 to 7: (Reserved) bit8 to 11: (Reserved) bit12 to 15: (Reserved)	R S	All	EtherCAT Spec.
43	Lost link detection time	ms	0 to 32767	2	An ESM state after Init->PreOP changes, When either Port0 or Port1 carries out this parameter setup time progress in the state (Port which is Lost link removes from an Init->PreOP changes time) where it was set to Lost link, Err85.2 "Lost link detection unusual protection" occurs. When 0 is set up, detection of Err85.2 "Lost link detection unusual protection" is disabled.	R S	All	EtherCAT Spec.
44	Software version	-	-2147483648 to 2147483647	4	The software versions 1 and 2 of a product are displayed. bit31 to 28: Reserved (Permanently set at 0) bit27 to 16: Software version 1 (in hexadecimal three-digit notation) bit15 to 12: Reserved (Permanently set at 0) bit11 to 0: Software version 2 (in hexadecimal three-digit notation) For example, in the case of Software version 1: 1.23 and Software version 2: 4.56, the value of this parameter will be 01230456h (19072086).	X	All	EtherCAT Spec.
79	For manufacturer's use	-	-	2	Permanently set at 0.	-	-	-
87	Communication function extended setup 5	-	-32768 to 32767	2	bit0: For manufacturer's use All bits permanently set at 0. bit1: Power supply module contactor output switching 0: Use EX-OUT1 with general-purpose output 1 1: EX-OUT1 is used as the contactor output (MC-OUT). * This setting is valid only for the Axis A parameter of the driver module whose module communication node address is 1. bit2 to 15: For manufacturer's use All bits permanently set at 0.	C	All	2.2

(To be continued)

No.	Title	Unit	Range	Size [byte]	Function/Contents	Attribute	Related control mode	Reference
92	Correction time of latch delay 2	25 ns	-2000 to 2000	2	Set the correction time for delay of the latch trigger signal detection. This parameter can be switched by Pr7.24 bit5. 0: Invalid 1: The correction time is reflected in the latch signal falling edge detection. Note Signal state of edge detection means the following - The rising edge detection means the photocoupler is turned ON. - The falling edge detection means the photocoupler is turned OFF.	B	All	EtherCAT Spec.
93	Homing return speed limit value	r/min	0 to 20000	2	Sets the Homing return limit speed. When the set value is less than the internal minimum speed, it is limited by the internal minimum speed. When setting value is greater than the maximum motor speed, it will be limited by the maximum motor speed. Note The value is converted into [command unit/s] during internal computation. The converted value is limited within the following range. 00000001h to 7FFFFFFFh (1 to 2147483647) If 0 is set for this parameter, 1 is internally set for control.	C	All	EtherCAT Spec.
99	Communication function extended setup 6	-	-32768 to 32767	2	bit0 to 2: For manufacturer's use All bits permanently set at 0. bit3: Command pulse accumulation value [command unit] output setting 0: Before filter 1: After filter bit4 to 15: For manufacturer's use All bits permanently set at 0.	B	All	EtherCAT Spec.
100	For manufacturer's use	-	-	2	Permanently set at 0.	-	-	-
101	For manufacturer's use	-	-	4	Permanently set at 0.	-	-	-
102	For manufacturer's use	-	-	4	Permanently set at 0.	-	-	-
103	For manufacturer's use	-	-	4	Permanently set at 0.	-	-	-
104	For manufacturer's use	-	-	4	Permanently set at 0.	-	-	-
108	For manufacturer's use	-	-	2	Permanently set at 7.	-	-	-
109	For manufacturer's use	-	-	2	Permanently set at 0.	-	-	-

(To be continued)

No.	Title	Unit	Range	Size [byte]	Function/Contents	Attribute	Related control mode	Reference
110	For manufacturer's use	-	-	4	Permanently set at 0.	-	-	-
113	Torque offset filter	0.01ms	0 to 6400	2	Set up the time constant of the 1st delay filter for torque offset (60B2h/68B2h).	B	All	-
116	Communication function shared setup 1	-	-2147483648 to 2147483647	4	Sets the communication functions common to both Axis A and Axis B. bit0: When EtherCAT communication is established Operation command by (PANATERM for Multi) (test run, FFT, etc.) execution enabled 0: Disabled 1: Enabled	S	All	EtherCAT
					bit1 to 31: For manufacturer's use Set all to 0.			
117	Communication function shared setup 2	-	-2147483648 to 2147483647	4	Sets the communication functions common to both Axis A and Axis B with C attribute. bit0: For manufacturer's use Set all to 0.	C S	All	EtherCAT
					bit1 to 2: For manufacturer's use Set all to 1. bit3 to 31: For manufacturer's use Set all to 0.			
118	Communication function shared setup 3	-	-	4	Permanently set at 0.	-	-	-
124	For manufacturer's use	-	-	4	Permanently set at 0.	-	-	-

9.1.9 Class 8: Special setting3

No.	Title	Unit	Range	Size [byte]	Function/Contents	Attribute	Related control mode	Reference
00	For manufacturer's use	-	-	2	Permanently set at 0.	-	-	-
01	For manufacturer's use	-	-	4	Permanently set at 1	-	-	-
02	For manufacturer's use	-	-	2	Permanently set at 0.	-	-	-
03	For manufacturer's use	-	-	2	Permanently set at 0.	-	-	-
04	For manufacturer's use	-	-	4	Permanently set at 1	-	-	-
05	For manufacturer's use	-	-	2	Permanently set at 0.	-	-	-
10	For manufacturer's use	-	-	4	Permanently set at 0.	-	-	-
12	For manufacturer's use	-	-	2	Permanently set at 0.	-	-	-
13	For manufacturer's use	-	-	4	Permanently set at 0.	-	-	-
14	For manufacturer's use	-	-	4	Permanently set at 0.	-	-	-
15	For manufacturer's use	-	-	4	Permanently set at 0.	-	-	-
17	For manufacturer's use	-	-	4	Permanently set at 0	-	-	-
18	For manufacturer's use	-	-	4	Permanently set at 0	-	-	-
19	For manufacturer's use	-	-	2	Permanently set at 0.	-	-	-

9.1.10 Class 9: Linear

No.	Title	Unit	Range	Size [byte]	Function/Contents	Attribute	Related control mode	Reference
0	For manufacturer's use	-	-	2	Permanently set at 0.	-	-	-
1	For manufacturer's use	-	-	4	Permanently set at 1	-	-	-
2	For manufacturer's use	-	-	2	Permanently set at 0.	-	-	-
3	For manufacturer's use	-	-	2	Permanently set at 0.	-	-	-
4	For manufacturer's use	-	-	2	Permanently set at 1	-	-	-
5	For manufacturer's use	-	-	2	Permanently set at 0.	-	-	-
6	For manufacturer's use	-	-	2	Permanently set at 0.	-	-	-
7	For manufacturer's use	-	-	2	Permanently set at 0.	-	-	-
8	For manufacturer's use	-	-	2	Permanently set at 0.	-	-	-
9	For manufacturer's use	-	-	2	Permanently set at 0.	-	-	-
10	For manufacturer's use	-	-	2	Permanently set at 0.	-	-	-
11	For manufacturer's use	-	-	2	Permanently set at 0	-	-	-
12	For manufacturer's use	-	-	2	Permanently set at 0	-	-	-
13	For manufacturer's use	-	-	2	Permanently set at 0.	-	-	-
14	For manufacturer's use	-	-	2	Permanently set at 0.	-	-	-
17	For manufacturer's use	-	-	2	Permanently set at 0.	-	-	-
18	For manufacturer's use	-	-	2	Permanently set at 0.	-	-	-
19	For manufacturer's use	-	-	2	Permanently set at 0.	-	-	-
20	For manufacturer's use	-	-	2	Permanently set at 0.	-	-	-
21	For manufacturer's use	-	-	2	Permanently set at 0.	-	-	-
22	For manufacturer's use	-	-	2	Permanently set at 0.	-	-	-
23	For manufacturer's use	-	-	2	Permanently set at 0.	-	-	-
24	For manufacturer's use	-	-	2	Permanently set at 0.	-	-	-
25	For manufacturer's use	-	-	2	Permanently set at 0.	-	-	-
26	For manufacturer's use	-	-	2	Permanently set at 0.	-	-	-
27	For manufacturer's use	-	-	2	Permanently set at 0.	-	-	-
28	For manufacturer's use	-	-	2	Permanently set at 0.	-	-	-
29	For manufacturer's use	-	-	2	Permanently set at 0.	-	-	-
30	For manufacturer's use	-	-	4	Permanently set at 0.	-	-	-
31	For manufacturer's use	-	-	2	Permanently set at 0.	-	-	-
32	For manufacturer's use	-	-	2	Permanently set at 0.	-	-	-
33	For manufacturer's use	-	-	2	Permanently set at 0.	-	-	-
34	For manufacturer's use	-	-	2	Permanently set at 0.	-	-	-
48	For manufacturer's use	-	-	2	Permanently set at 0.	-	-	-
49	For manufacturer's use	-	-	2	Permanently set at 0.	-	-	-
50	For manufacturer's use	-	-	2	Permanently set at 0.	-	-	-

Note

Class 9 cannot be referred to in EtherCAT communication.

9.1.11 Class 15: For manufacturer's use

No.	Title	Unit	Range	Size [byte]	Function/Contents	Attribute	Related control mode	Reference
00	For manufacturer's use	-	-	2	Permanently set at 0.	-	-	-
02	For manufacturer's use	-	-	2	Permanently set at 0.	-	-	-
16	For manufacturer's use	-	-	2	Permanently set at 2.	-	-	-
17	For manufacturer's use	-	-	2	Permanently set at 4.	-	-	-
30	For manufacturer's use	-	-	2	Permanently set at 0.	-	-	-
31	For manufacturer's use	-	-	2	Permanently set at 5.	-	-	-
33	For manufacturer's use	-	-	2	Permanently set at 0.	-	-	-
34	For manufacturer's use	-	-	2	Permanently set at 0.	-	-	-
35	For manufacturer's use	-	-	2	Permanently set at 1.	-	-	-

Note

Class 15 cannot be referred to in EtherCAT communication.

10

Timing Chart

10.1 Servo drive system startup timing diagram on control power-up

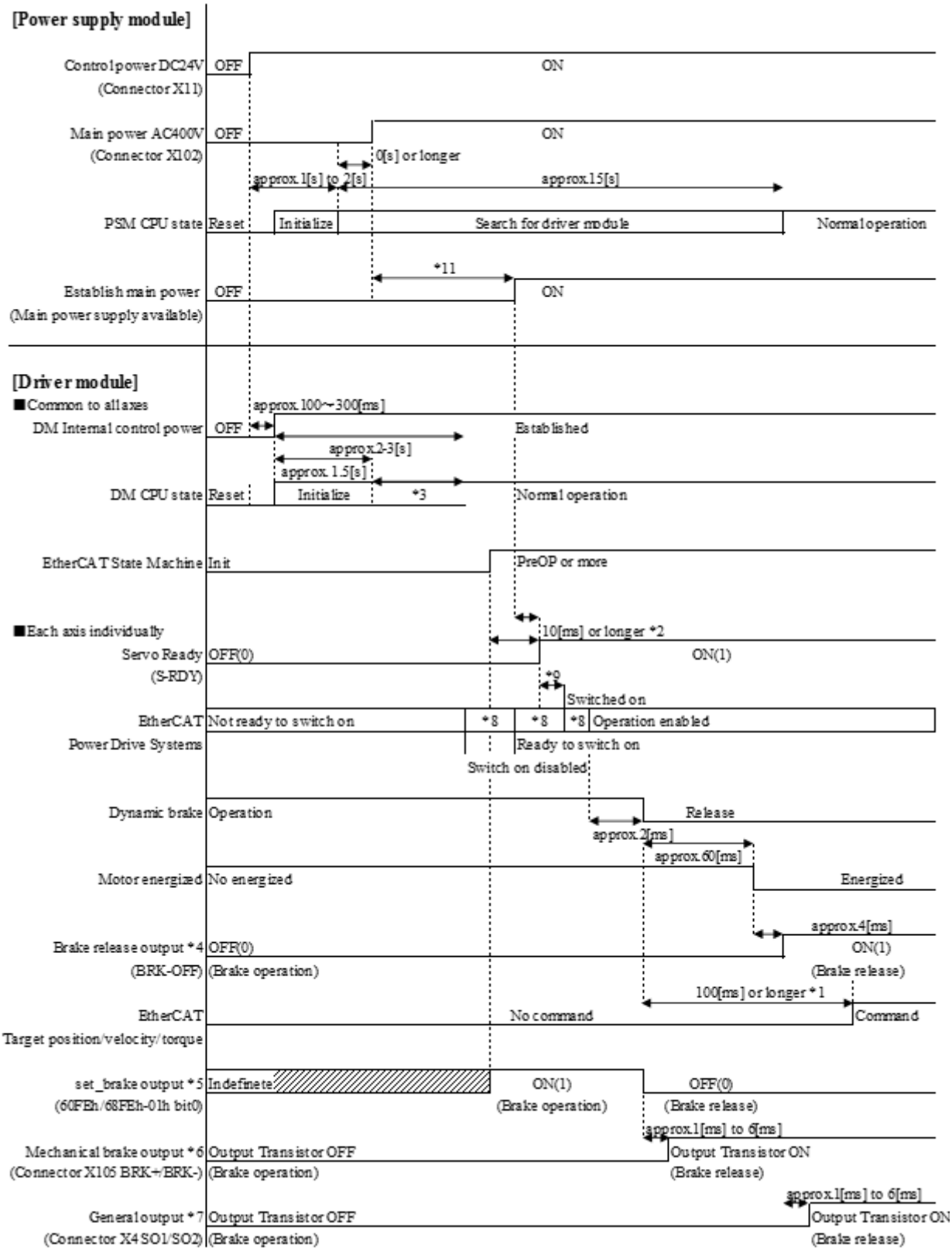

This figure shows the signal timing of each servo drive system from when the control power is turned on until the control command is input.

Connect the control power supply DC24V and main power supply AC400V to the power supply module connector.

Servo-on command (PDS state transition in EtherCAT communication), position / speed / torque commands are the timings shown abovePlease input according to.

*1 It is shown that an instruction input receptionist is not ready in this section. Please input instructions after the completion of preparation.

*2 The servo ready is turned on when all the following conditions are satisfied:
- Initialization of microcomputer is completed
- Main power supply is established
- Not in STO state
- No alarm is issued
- EtherCAT communication is established

*3 After Internal control power supply, protective functions are active from approx. 1.5 sec after the start of initializing microcomputer. Please set the signals, especially for protective function, for example over-travel inhibit input (POT, NOT) or external scale input, so as to decide their logic until this term. The lapse time can be changed with Pr 6.18 Power-up wait time.

*4 A brake release output (BRK-OFF) is different from the set brake of 60FEh via EtherCAT communication.

*5 The set brake output is output controlled by the set brake of 60FEh/68FEh via EtherCAT communication. For information on the set brake output details, refer to "TECHNICAL REFERENCE EtherCAT Communication Specification (SX-DSV03456)".
The set brake output can be released in the servo-off state.Therefore, please control the set brake output in consideration of safety.

*6 Pr4.59 "Mechanical brake signal setup" can be used to select the timings at which the brake connected to the mechanical brake output (BRK+/BRK-) is operated or released. The figure shows the case where set_brake output is selected for mechanical brake output (BRK+/BRK-).

*7 When controlling the mechanical brake from the servo control I / O connector X4,Assign an arbitrary brake signal (BRK-OFF, set brake) to the general-purpose output, referring to "2.4 I/O signal allocation function".The figure shows the case when brake release output (BRK-OFF) is selected for SO1 or SO2.

*8 Object operation from the host controller is required for the PDS state transition of EtherCAT communication.
Refer to
For details, refer to "TECHNICAL REFERENCE EtherCAT Communication Specification (SX-DSV03456)".

*9 If the power supply module is not in the main power supply established state, the EtherCAT communication PDS state cannot be changed from Ready to switch on to Switched on.

*10 During the connected number confirmation period, the power supply module searches for connected driver modules via inter-module communication.If a driver module with an inter-module communication node address of 1 is not found during this time, the power supply module detects PSM Err. 26 (PSM inter-module communication ID setting error protection).If the number of connected devices is exceeded, PSM Err.22 (PSM connected number excess error protection) is detected.Note that in these cases, all driver modules connected to this power supply module will have a corresponding protection function (Err69.5 or Err69.6).

*11 With a power supply module, the time from when the main power supply of AC400V is turned on until the main power supply is established varies greatly depending on the power supply capacity connected to the main power supply and the capacity and number of driver modules connected to the power supply module. Visually confirm that the green LED (RDY) on the front panel of the power supply module is lit, and that the 7-segment LED on the front panel of the driver module is the decimal point in the right digit of the normal display, and that the main power supply is established when no alarm is generated. I can do it.In EtherCAT communication, it is possible to confirm the establishment of the main power supply by checking the servo ready (S-RDY) status and making the correct transition after switching the PDS status to Switched on.

10.2 Driver module servo-ON/OFF action while the motor is at stall (servo-lock)

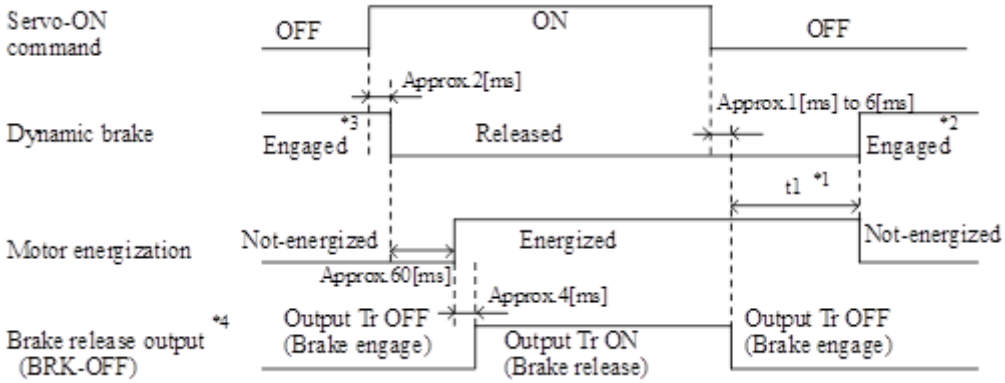

The above figure shows the operation timing of the driver module when the servo on / off operation is switched while the motor is stopped (during servo lock).

When the servo-on command is ON in the above figure, it indicates that the PDS status has been changed to Operation enabled when operating with EtherCAT communication of the driver module.

Servo-on command OFF indicates that the PDS status has changed to other than Operation enabled with the Disable operation command.

When assigning the brake release output in the above figure to the mechanical brake output (motor connector X105 BRK+/BRK- pin), set Pr4.59 “Mechanical brake signal setting”.

▼ Refer to

Refer to "2.4 I/O signal allocation function" when assigning the brake release output in the above figure to a general-purpose output (servo control I / O connector X4 SO1 / SO2 pin).

*1 t1 depends on the setup value of Pr 4.37 (Mechanical brake action at stalling setup).

*2 The operation of dynamic brake during servo off depends on the setup value of Pr 5.06 (Sequence at Servo-Off).

*3 Servo-ON will not be activated until the motor speed falls below approx. 30 r/min.

*4 The brake release output (BRK-OFF) automatically changes in sync with the servo ON/OFF of each axis. It is different from set brake output (set brake) operated from EtherCAT communication.

10.3 Driver module servo-ON/OFF action while the motor is in motion

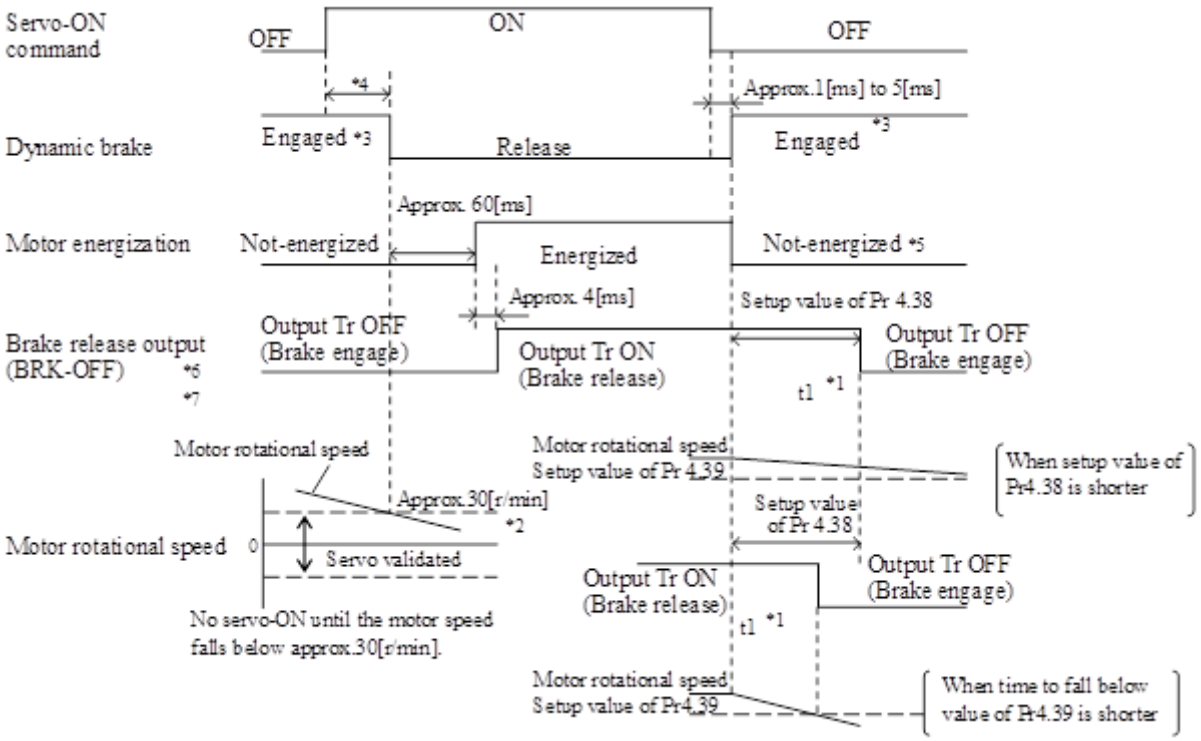

The above figure shows the operation timing when the servo on / off operation is switched during motor rotation (more than 30[r/min]) in the driver module.

Emergency stop or trip timing. It cannot be used repeatedly. During normal operation, stop the motor and perform servo on / off operation.

When the servo-on command is ON in the above figure, it indicates that the PDS status has been changed to Operation enabled when operating with EtherCAT communication of the driver module. Servo-on command OFF indicates that the PDS status has changed to other than Operation enabled with the Disable operation command.

When assigning the brake release output in the above figure to the mechanical brake output (motor connector X105 BRK+/BRK- pin), set Pr4.59 “Mechanical brake signal setting”.

When assigning the brake release output in the above figure to a general-purpose output (servo control I / O connector X4 SO1 / SO2 pin), refer to "2.4 I/O signal allocation function".

*1 t1 will be a shorter time of either the setup value of Pr 4.38 (Mechanical brake action at running setup) or elapsing time for the motor speed to fall below Pr 4.39 (Brake release speed setup).

*2 Even when the servo-ON command is turned on again while the motor is decelerating, transition to servo-ON is not performed until the motor stops.

*3 For the action of dynamic brake at servo-OFF, refer to an explanation of Pr 5.06 (Sequence at Servo-Off) as well.

*4 Servo-ON will not be activated until the motor speed falls below approx. 30 r/min.

*5 For the motor energization during deceleration at Servo-OFF depends on the setup value of Pr 5.06 (Sequence at Servo-Off).

*6 A brake release output (BRK-OFF) is different from the set brake of 60FEh/68FEh via EtherCAT communication.
▼ Refer to
For information on the set brake output details, refer to "TECHNICAL REFERENCE EtherCAT Communication Specification (SX-DSV03456)".

*7 The mechanical brake does not follow the brake release output (BRK-OFF) but operates at the timing when the mechanical brake detects an error, when Err17.0 "Mechanical brake circuit overvoltage protection" or Err17.1 "Mechanical brake circuit overload protection" occurs while a mechanical brake circuit with a built-in driver module is used.
▼ Refer to
For details about mechanical brake circuit, refer to "REFERENCE SPECIFICATIONS Driver module section (SX-DSV03454)".

10.4 Driver module when an alarm has occurred (at dynamic brake/free-run stop)

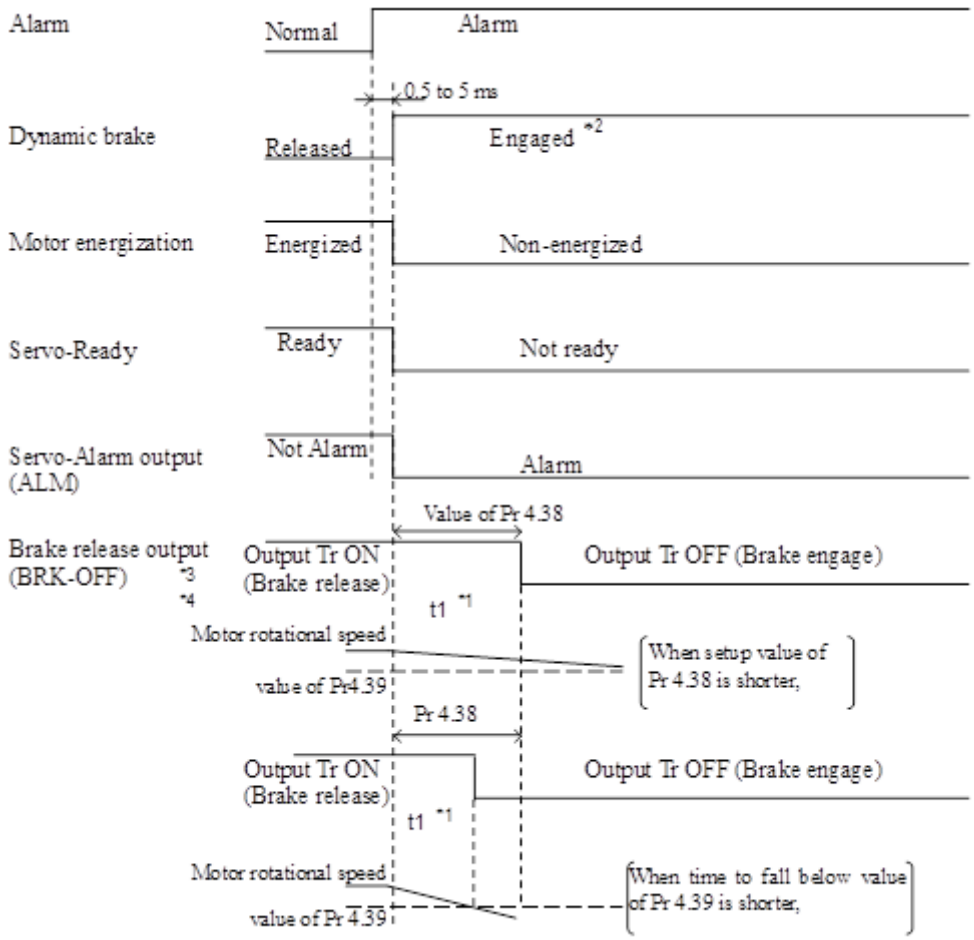

The above figure shows the operation timing when dynamic braking or free-run deceleration is selected when the driver module detects an error (alarm) in the servo-on command state.

The timing in the above figure varies depending on the alarm sequence operation settings.

When assigning the brake release output in the above figure to the mechanical brake output (motor connector X105 BRK + / BRK- pin), set Pr4.59 “Mechanical brake signal setting”.

▼ Refer to

Refer to "2.4 I/O signal allocation function" when assigning the brake release output in the above figure to a general-purpose output (servo control I / O connector X4 SO1 / SO2 pin).

*1 t1 will be a shorter time of either the setup value of Pr 4.38 (Mechanical brake action at running setup) or elapsing time for the motor speed to fall below Pr 4.39 (Brake release speed setup).

*2 When an alarm is generated, the dynamic brake operates according to Pr 5.10 (Sequence at alarm).

*3 A brake release output (BRK-OFF) is different from the set brake of 60FEh/68FEh via EtherCAT communication.
▼ Refer to
For information on the set brake output details, refer to "TECHNICAL REFERENCE EtherCAT Communication Specification (SX-DSV03456)".

*4 The mechanical brake does not follow the brake release output (BRK-OFF) but operates at the timing when the mechanical brake detects an error, when Err17.0 "Mechanical brake circuit overvoltage protection" or Err17.1 "Mechanical brake circuit overload protection" occurs while a mechanical brake circuit with a built-in driver module is used.
▼ Refer to
For details about mechanical brake circuit, refer to "REFERENCE SPECIFICATIONS Driver module section (SX-DSV03454)".

10.5 Driver module when an alarm has occurred (at emergency stop)

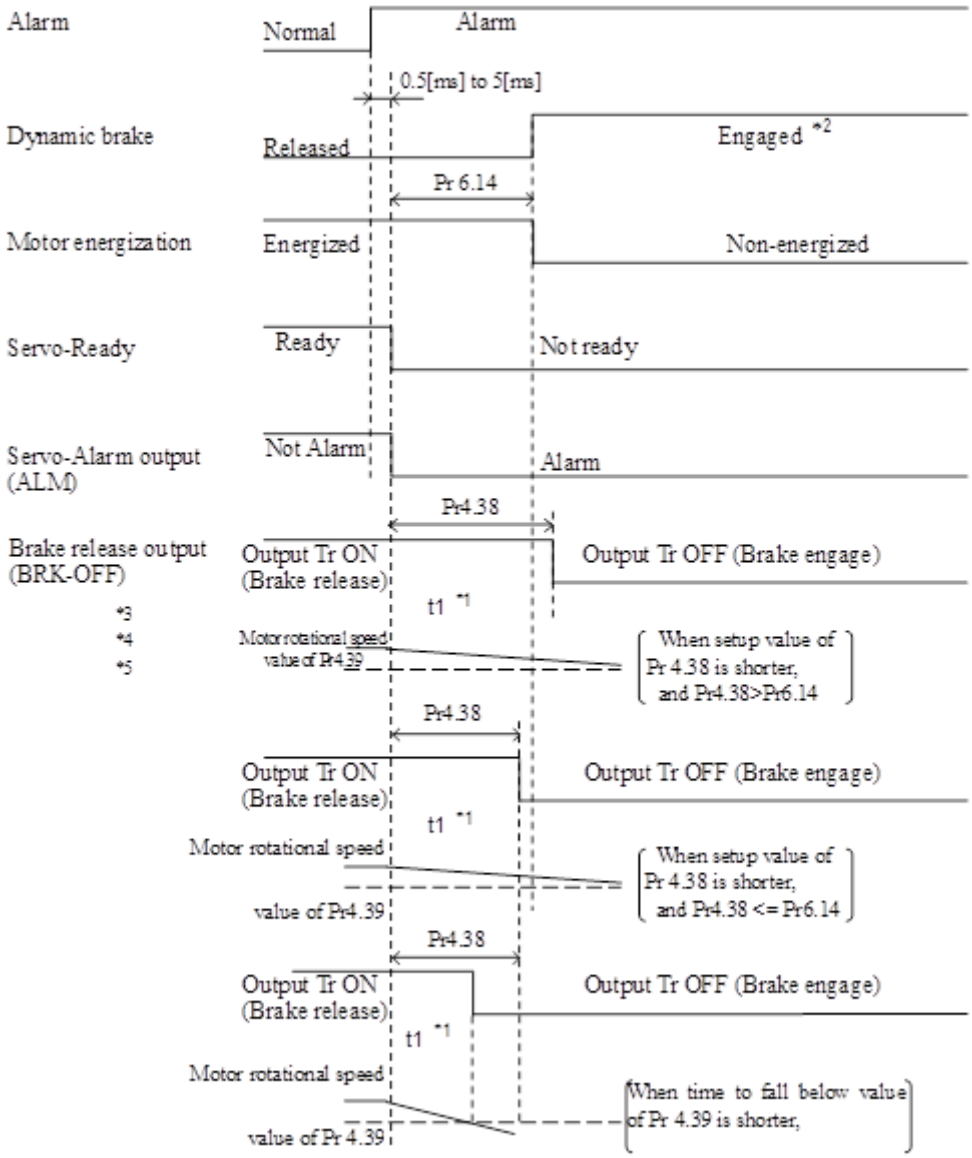

The above figure shows the operation timing when the immediate stop deceleration is selected when an error (alarm) that allows immediate stop deceleration is detected in the driver module in the servo-on command state.

The timing in the above diagram varies depending on the alarm sequence operation settings.

When assigning the brake release output in the above figure to the mechanical brake output (motor connector X105 BRK + / BRK- pin), set Pr4.59 “Mechanical brake signal setting”

▼ Refer to

Refer to "2.4 I/O signal allocation function" when assigning the brake release output in the above figure to a general-purpose output (servo control I / O connector X4 SO1 / SO2 pin).

*1 t1 will be a shorter time of either the setup value of Pr 4.38 (Mechanical brake action at running setup) or elapsing time for the motor speed to fall below Pr 4.39 (Brake release speed setup).

*2 When an alarm is generated, the dynamic brake operates according to Pr 5.10 (Sequence at alarm).

*3. A brake release output (BRK-OFF) is different from the set brake of 60FEh via EtherCAT communication.

▼ Refer to

For information on the set brake output details, refer to "TECHNICAL REFERENCE EtherCAT Communication Specification (SX-DSV03456)".

*4 We recommend the setting in which Pr4.38 (Mechanical brake action at running setup) becomes equal toPr6.14 (Emergency stop time at alarm). If Pr4.38 is set to less than or equal to Pr6.14, the brake operates after the length of time set for Pr4.38 elapses. If Pr4.38 is set to greater than Pr6.14, the brake does not operate after the length of time set for Pr4.38 elapses,but the brake operates at the time of transition to non-energizing.

*5 The mechanical brake does not follow the brake release output (BRK-OFF) but operates at the timing when the mechanical brake detects an error, when Err17.0 "Mechanical brake circuit overvoltage protection" or Err17.1 "Mechanical brake circuit overload protection" occurs while a mechanical brake circuit with a built-in driver is used.

▼ Refer to

For details about mechanical brake circuit, refer to "REFERENCE SPECIFICATIONS Driver module section (SX-DSV03454)".

10.6 Driver module when an alarm has been cleared

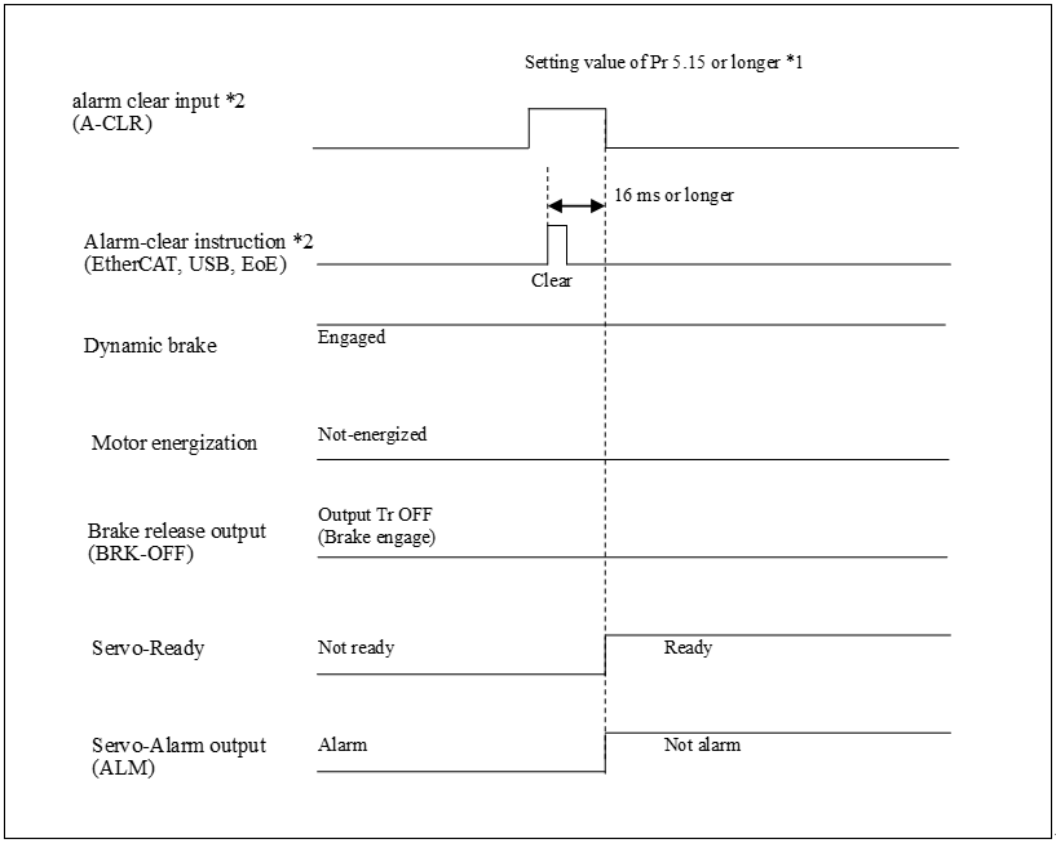

The above figure shows the operation timing when an alarm clear command is executed when a clearable alarm is generated in the driver module.

Since the servo-on command is canceled once when an alarm is generated, perform PSD transition from EtherCAT communication at the timing of section "10.2 Driver module servo-ON/OFF action while the motor is at stall (servo-lock)" when the servo is turned on again.

*1 The length of time for identifying alarm clear input is the length of time set for Pr5.15.

*2 When clearing an alarm from EtherCAT communication or PANATERM for Multi(USB communication, EoE communication), turn OFF alarm clear input (A-CLR) once.

(Blank page)

11

Power Supply Module

11.1 Basic specifications

The specifications of the power supply module (PSM) are shown below.

Refer to

For hardware specifications, refer to "REFERENCE SPECIFICATIONS Power supply module section (SX-DSV03452)".

Item			Content
Main power supply			3-phase, 400 V
Control power supply			DC 24 V
Control input signal		DIN1	Contactor feedback
		DIN2	Regenerative resistor monitoring
Control output signal			1 power relay output for contactor control
Front panel			2 LEDs
		RDY (green)	State in which power supply is possible
		ERR (red)	State with power supply module alarm/warning detection
Regenerative function			Excess regenerative power can be consumed by installing a regenerative resistor outside the power supply module.
Protective functions	Control power supply monitoring		Undervoltage
	Main power supply monitoring		Overvoltage Phase lack, Overcurrent, Undervoltage (Note 1) AC interruption (Note 1) Main power supply overload (Note 2)
	Regenerative monitoring		Overload, Rgenerative resistance temperature monitoring
	Temperature monitoring		Heatsink overheating, Amospheric overheating
	Contactor monitoring		Contactor feedback error
	Self-diagnosis		Regenerative drive Tr/IC error Thermistor failure CPU error Watchdog, etc.

(Note 1) These two main power monitoring results are not detected on the power supply module side, but the monitoring results are notified to all connected driver modules, and combined with the conditions on the driver module side, Err13.0 / An alarm is detected as Err13.1.

(Note 2) Supported in a software version of function expansion edition 1 or later.

11.2 Interface specifications

11.2.1 Connector for Inter-module communication

Connect the inter-module communication cable that exchanges information with the driver module.

Name of signal	Signal	Connector pin No.	Content
Data (+)	DATA+	1	This is the data signal (+).
Data (-)	DATA-	2	This is the data signal (-).
Manufacturer use	-	3	
Manufacturer use	-	4	
Emergency	EMG	5	This is the power supply module alarm output signal.
Ground	GND	6	This is the signal ground.

There is one inter-module communication connector for the power supply module (X1) and two for each driver module (X1A, X1B), connect the communication cable as shown below.

Refer to

For details, refer to "REFERENCE SPECIFICATIONS Power supply module section (SX-DSV03452)" and "REFERENCE SPECIFICATIONS Driver module section (SX-DSV03454)".

Use the DIP switch on the front panel of each driver module to set the inter-module communication node address (ID) with a different number between 1 and 20 for the driver modules connected to the same power supply module. For details, refer to "3.2 Node address setup in Inter-module communication" in this document.

Set the inter-module communication node address (ID) to 1 for one of the driver modules connected to the same power supply module. Otherwise, the power supply module will detect PSM Err.26 “PSM module communication ID error protection”.

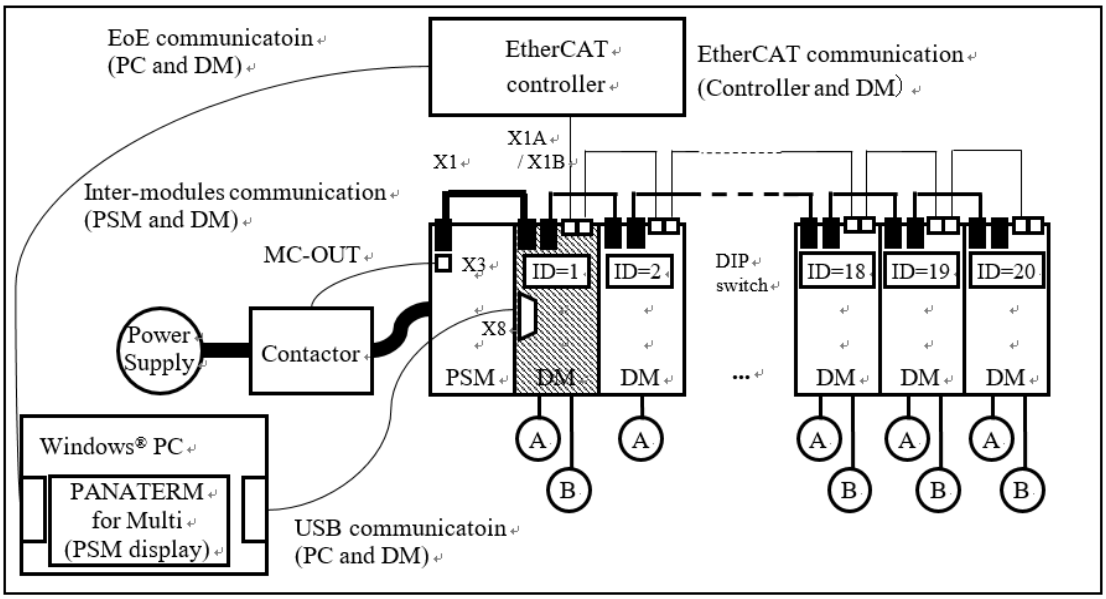

The following functions are added to the driver module whose inter-module communication node address (ID) is 1.

- PSM parameter setting, monitoring, confirmation of alarm information

Using the setup support software PANATERM for Multi that runs on a Windows® PC, it is possible to check the parameters, monitor, and alarm information of the power supply module via USB communication of the driver module via inter-module communication.

- If there is an abnormality in the inter-module communication due to disconnection of the inter-module communication cable, it is not possible to communicate with PANATERM for Multi. Turn it off and re-turn it on.

Refer to

For details, refer to the operation manual of the setup support software PANATERM for Multi.

* Windows® is a registered trademark of Microsoft Corporation in the United States and other countries.

- Contactor output (MC-OUT) control via EtherCAT communication

By replacing the Axis A side general-purpose output 1 (EX-OUT1) with the contactor output (MC-OUT) of the power supply module, the contactor output can be controlled via EtherCAT communication.

Refer to

For details, refer to "2.2 I/O connector output signal" in this document.

11.2.2 External device input signal connector

A feedback input that monitors the normal operation of the magnetic contactor (contactor) and external regenerative resistor can be connected to the general-purpose input.

Refer to

For general-purpose input circuit specifications, refer to "REFERENCE SPECIFICATIONS Power supply module section (SX-DSV03452)".

Name of signal	Signal	Connector pin No.	Content
General purpose input 1	DIN1	1	Feedback input of the magnetic contactor (contactor) that controls main power on / off.
General purpose input 2	DIN2	2	Regenerative resistor overheat protection input.
Protective ground	PE	3	This is the protective ground.
General purpose input shared 1	COM1	4	Contactor feedback common terminal.
General purpose input shared 2	COM2	5	Regenerative resistor overheat protection common terminal.

The enable / disable and input logic of the above functions can be set with the following power supply module parameters.

<table>
<tr><th>PSM Pr.</th><th>Name</th><th>Setting range</th><th>Shipping setting</th><th>Unit</th><th>Content</th></tr>
<tr><td>04</td><td>Contactor feedback monitoring setting</td><td>-32768 to 32767</td><td>0</td><td>-</td><td>Sets up the function setting for each bit.
<table>
<tr><th>bit</th><th>Content</th><th>Logic</th></tr>
<tr><td>0</td><td>Monitoring function</td><td>0: Enable
1: Disable</td></tr>
<tr><td>1</td><td>DIN1 logical setup</td><td>With the contactor output MC1/MC2 relay short-circuited (contactor operating state, main power-on state)
0: Generates PSM Err.14 (PSM contactor error protection) when DIN1-COM1 terminals are open.
1: Generates PSM Err.14 (PSM contactor error protection) when a Vdc (12-24 [V]) voltage is applied across the DIN1-COM1 terminals.
When the relay between MC1/MC2 is open, PSM Err.14 is detected in the reverse logic.</td></tr>
<tr><td>2 to 15</td><td>Not use</td><td></td></tr>
</table></td></tr>
<tr><td>05</td><td>Regenerative resistance temperature monitoring setting</td><td>-32768 to 32767</td><td>2</td><td>-</td><td>Sets up the function setting for each bit.
<table>
<tr><th>bit</th><th>Content</th><th>Logic</th></tr>
<tr><td>0</td><td>Monitoring function</td><td>0: Enable
1: Disable</td></tr>
<tr><td>1</td><td>DIN2 logical setup</td><td>0: Generates PSM Err.09 (PSM regenerative resistance monitoring protection) when a Vdc (12-24 [V]) voltage is applied between the DIN2 and COM2 terminals.
1: Generates PSM Err.09 (PSM regenerative resistance monitoring protection) when DIN2-COM2 terminals are open.</td></tr>
<tr><td>2 to 15</td><td>Not use</td><td></td></tr>
</table></td></tr>
</table>

11.2.3 Contactor control output connector

This is a control output terminal for controlling the magnetic contactor (contactor) that turns on and off the main power from the controller using EtherCAT communication.

By switching the general-purpose output EX-OUT1 to the contactor output MC-OUT of the power supply module, only the A-axis of the driver module with the module-to-module communication ID 1 can turn on and off the main power from the controller.

Refer to

For details, refer to "2.2 I/O connector output signal"comment * 7) in this document.

For the specifications of the contactor control output circuit, refer to the "REFERENCE SPECIFICATIONS Power supply module section (SX-DSV03452)".

Name of signal	Signal	Connector pin No.	Content
Contactor control 1	MC1	1	Magnetic contactor (contactor) control output terminal (no polarity). When using contactor control output, wire so that the magnetic contactor is turned on and the main power is turned on when MC1 and MC2 are short-circuited. The time from the operation of the contactor output MC-OUT to the change of the contactor control output MC1 / CM2 varies depending on the EtherCAT communication cycle, the number of connected driver modules, and the timing of communication between modules. Please design the timing by adding a delay of about 20 [ms] with a margin in addition to the operating time of the magnetic contactor (contactor) itself.
Contactor control 2	MC2	2	

11.3 Front panel

11.3.1 Front panel configuration

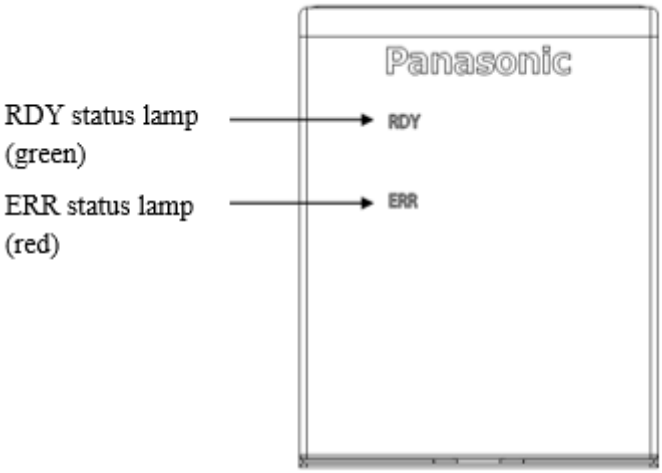

■ **LED display**

Name of signal	State	Content
RDY status lamp (green)	ON	Main power supply established and power supply module alarm has not occurred. • Main power establishment conditions: Three-phase 400V was applied to the main power supply of the power supply module, and the rectified main power supply DC voltage exceeded the main power supply establishment voltage, and the main power supply establishment wait time had elapsed.
	OFF	Main power shut-off or power supply module alarm occurrence status. • Main power shutdown conditions: - Initializing. - After the main power supply is established, the main power supply is shut off, and the main power supply DC voltage is less than the main power supply establishment voltage.
ERR status lamp (red)	ON	Power supply module alarm detection.
	Blinking	No power supply module alarm/warning detection.
	OFF	No power supply module alarm/warning, or initializing.

11.4 Basic functions

11.4.1 Basic block diagram

The various functions of the power supply module are shown in the following block diagram.

(1) The power supply module converts the AC400V input connected to the main power supply connector (X102) into a DC power supply by a converter unit consisting of a rectifier circuit and a main power supply capacitor, and supplies the power required for driving the motor of the driver module connected to the high-voltage power supply bus bar (X12).

(2) The regenerative processing circuit controls the regenerative power from the driver module to be consumed by the external regenerative resistor connected to the regenerative resistor connector X103.

(3) Connect the control power supply common to the power supply module and driver module to the control power supply connector (X11), and supply it to multiple driver modules through the control power supply bus bar (X104).

(4) Regenerative resistor temperature and contactor feedback input signal can be connected to the external device input connector (X2).

(5) The contactor control output connector (X101) can control the auxiliary contact of the magnetic contactor of the main power supply. The main power ON / OFF can be controlled from the EtherCAT object of the specified driver module connected by EtherCAT communication via inter-module communication.

(6) Inter-module communication (X1) is used to communicate with the driver modules.

(7) The status of the power supply module is indicated by the 2 LEDs on the front panel.

(8) Alarm/warning functions are provided to monitor each part of the power supply module.

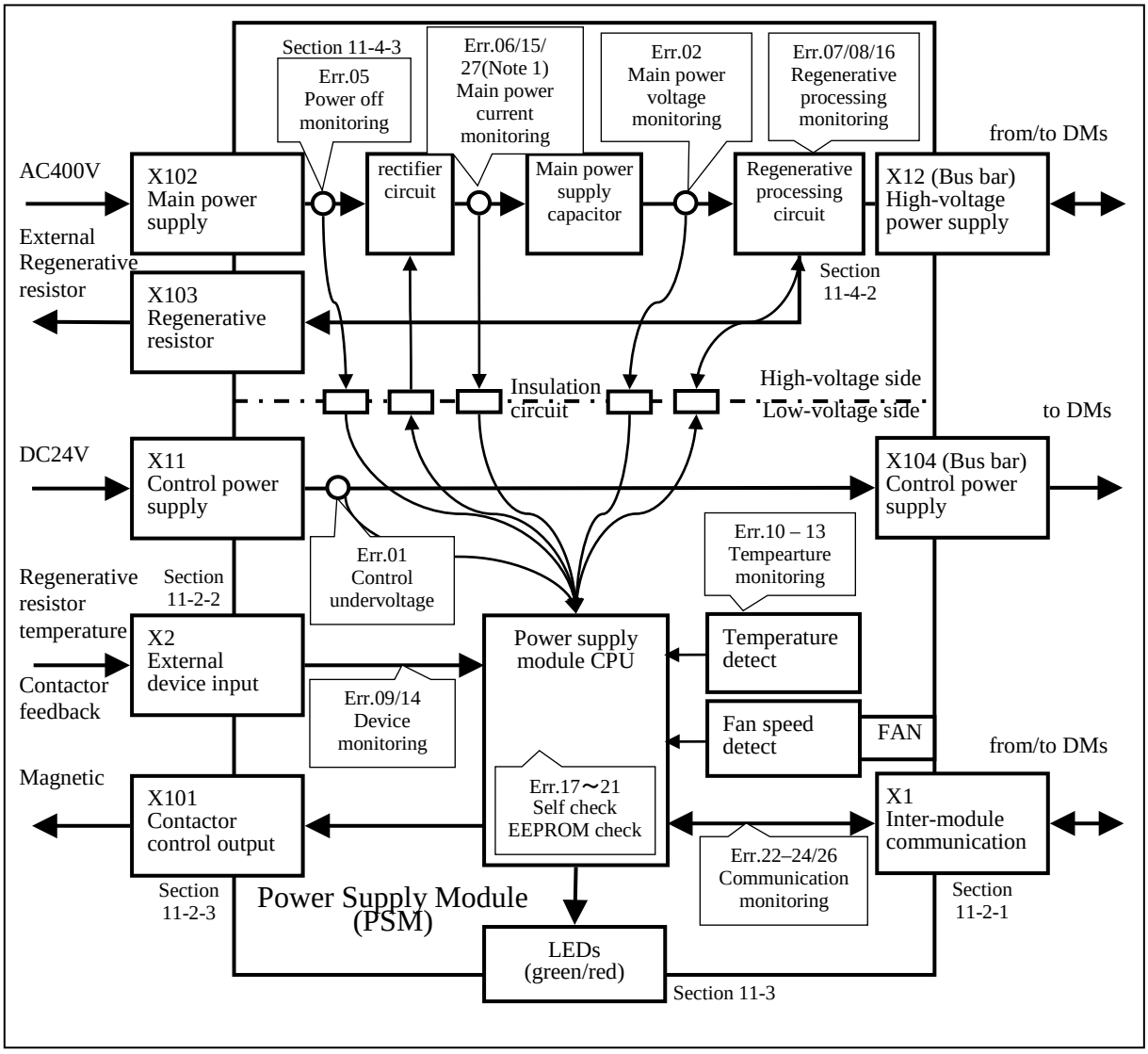

(Note 1) Supported in a software version of function expansion edition 1 or later.

11.4.2 Regenerative control function

This section describes the parameters of the power supply module that are related to the regeneration control function.

Refer to

For details on the specifications of the regenerative resistor, refer to "REFERENCE SPECIFICATIONS Power supply module section (SX-DSV03452)".

■ Relevant parameters

PSM Pr.	Name	Setting range	Shipping setting	Unit	Content
00	Regenerative operation setup	0 to 3	1	-	Sets up the regeneration operation. 0: To be used by the manufacturer (do not set up the value) 1: An external resistor is used to execute regenerative overload protection. 2: An external resistor is used, but regenerative overload protection is not executed. 3: Driver is used without regenerative resistor, and regenerative overload protection is not executed.
01	Regenerative resistor load factor selection	0 to 4	0	-	Selects the operation method for the regenerative resistor load factor when an external regenerative resistor is selected (PSM Pr.00 = 1, 2). 0: Regenerative overload protection is detected with the regenerative resistor operation rate of 10%. 1 to 4: To be used by the manufacturer (do not set up the values)

11.4.3 Main power off detection function

This section describes the parameters that are related to main power off detection.

Refer to

For specifications of the main power supply, refer to "REFERENCE SPECIFICATIONS Power supply module section (SX-DSV03452)".

PSM Pr.	Name	Setting range	Shipping setting	Unit	Content
02	Main power off detection time	0 to 2000	70	ms	Sets up the main power off detection time. Main power off is not detected if the setting value is set smaller than 20 or is set to 2000.
03	Main power off warning detection time	0 to 2000	0	ms	Sets the main power off warning detection time. The main power off warning is not detected when the setting value is smaller than 10 or is set to 2000.

11.5 Protective functions

11.5.1 List of protective functions

A list of PSM protection functions detected by the power supply module is shown below.

(9) Power supply module side
The power supply module alarm (PSM alarm) shown in the table below is detected.During PSM alarm occurrence, the ERR status lamp (red) on the front panel lights.For monitoring PSM alarms, refer to the operation manual of the setup support software PANATERM for Multi.

(10) Driver module side
When a PSM alarm occurs, the DM alarm shown in the table below is generated on all axes of all drive modules connected to the power supply module.Multiple PSM alarms are output as a single DM alarm, therefore, check the PSM alarm number if you want to know the exact cause of the alarm.
To restore both the drive module and the power supply module that have entered the alarm state to normal, it is necessary to first clear the PSM alarm and then clear the DM alarm for each drive module.
To clear the PSM alarm, it is necessary to remove the cause of the alarm and connect to the power supply module with the setup support software PANATERM for Multi and press the alarm clear button on the alarm screen or turn on the control power again.

Alarm number		Alarm name	Alarm attribute	
PSM	DM		History (Note 1)	Clear (Note 2)
01	69.4	PSM control power supply undervoltage alarm	✕	✓
02	69.2	PSM main power supply overvoltage alarm	✓	✓
05		PSM main power supply open phase alarm	✓	✓
06		PSM main power supply overcurrent alarm	✓	✕
07	69.3	PSM regenerative overload alarm	✓	✕
08	69.2	PSM regenerative transistor alarm	✓	✕
09		PSM regenerative resistor monitoring alarm	✕	✕
10	69.3	PSM heat sink overheat alarm	✓	✕
11	69.2	PSM heat sink thermal alarm	✓	✕
12	69.3	PSM overheat alarm	✓	✕
13	69.2	PSM thermal alarm	✓	✕
14		PSM contactor feedback alarm	✕	✓
15		PSM main power current detection circuit alarm	✓	✕
16		PSM regenerative transistor short circuit alarm	✓	✕
17		PSM self check alarm	✓	✕
18	69.4	PSM EEPROM check alarm 1	✕	✕
19		PSM EEPROM check alarm 2	✕	✕
20		PSM EEPROM check alarm 3	✕	✕
21		PSM EEPROM check alarm 4	✕	✕
22	69.6	PSM detection of excess number of connected driver module alarm	✓	✕
23	69.0	PSM inter-module communication timeout alarm	✕	✕
24	69.1	PSM inter-module communication CRC alarm	✓	✕
26	69.5	PSM inter-module communication ID setting alarm	✕	✕
27	69.2	PSM main power supply overload alarm (Note 3)	✓	✓

(Note 1) Alarm attribute : History
✓ indicates that the alarm remains in the PSM alarm history. ✕ indicates that the alarm does not remain in the PSM alarm history.
For the reference of PSM alarm history, refer to the operation manual of the setup support software PANATERM for Multi.

(Note 2) Alarm attribute : Clear
✓ indicates that the PSM alarm can be cleared. ✕ indicates that the PSM alarm can not be cleared.
To clear the alarm of the power supply module, it is necessary to press the alarm clear button on the PSM alarm display of the setup support software PANATERM for Multi. Please note that the PSM alarm cannot be cleared except by this method.
When Err27 (PSM main power supply overload alarm) is triggered, you can clear it in 100 sec or longer after the error occurs.
The alarm clear request input during this period will be cleared after it becomes clearable.

(Note 3) Supported in a software version of function expansion edition 1 or later.

11.5.2 Details of protective functions

PSM alarm number	PSM alarm name	Cause of alarm	Measures of alarm
01	PSM control power supply undervoltage alarm	The control power voltage of the power supply module has dropped to below the specified value.	Supply the correct voltage to the control power input (DC 24 V).
		1) The control power supply voltage (DC24V) is low: The occurrence of an instantaneous power failure, etc.	1) Measure the voltage at the control power input connector and check if it is the specified value: Check that the control power is not turned on or off at an extreme slow up / slow down.
		2) Insufficient control power capacity: The power supply voltage has dropped due to the inrush current when the control power is turned on.	2) Increase the control power capacity: Try changing the control power.
		3) Power supply module failure: Related circuit is broken	3) Replace the power supply module.
02	PSM main power supply overvoltage alarm	The main power supply DC bus voltage exceeded the allowable input voltage range.	Supply the correct voltage to the main power input (AC400V). In addition, an instantaneous voltage increase due to regenerative power from the driver module is avoided.
		1) The voltage of the converter section exceeded the specified value.	1) Measure the line voltage of the connectors X102 terminal (L1, L2, L3) and check for abnormal voltage fluctuations.
		2) Voltage jumps with phase-advancing capacitors and UPS (Uninterruptible Power Supply).	2) Try removing the phase advance capacitor and UPS.
		3) Disconnection of external regenerative resistor.	3) Measure the resistance value of the external regenerative resistor with a tester. If it is infinity, it is broken. Replace the external resistor.
		4) External regenerative resistance is inappropriate and regenerative energy cannot be absorbed.	4) Change to the specified regenerative resistance and power value.
		5) Power supply module failure: Related circuit is broken	5) Replace the power supply module.
05	PSM main power supply open phase alarm	A phase failure of the main power supply connector X102 terminal (L1, L2, L3) was detected in the main power established state.	Connect the correct power supply to the main power input (AC400V).
		1) Disconnection or drop out of L1, L2, and L3 lines.	1) Check the main power input wiring.
		2) L1-L2 / L2-L3 / L1-L3 Interphase voltage imbalance.	2) Measure the line voltage of the main power input connector (L1, L2, L3). Eliminate phase voltage imbalance.
		3) The main power supply voltage is low.	3) Check if the line voltage is the specified value.
		4) Power supply module failure: Related circuit is broken	4) Replace the power supply module.

(To be continued)

PSM alarm number	PSM alarm name	Cause of alarm	Measures of alarm
06	PSM main power supply overcurrent alarm	Abnormal current continuously flows to the main power supply DC bus of the power supply module in the main power supply established state.	Reduce the load current of the main power supply DC bus.
		1) The total output of all motors of the driver module connected to the power supply module is excessive.	1) The power supply module checks the operation pattern of all motors connected to the driver module that supplies power, and reduces the load. Decrease the acceleration time. Reduce the motor speed.
		2) Short circuit of main power supply DC bus.	2) Check the high-voltage power supply bus bar connection between the power supply module and the driver module.
		3) Power supply module failure: Related circuit is broken	3) Replace the power supply module.
07	PSM regenerative overload alarm	Regenerative energy exceeded the capacity of regenerative resistance.	Reduce regenerative energy. Increase regeneration capacity.
		1) The voltage of the converter rises due to regenerative energy during deceleration due to a large load inertia, and the voltage further rises due to insufficient energy absorption by the regenerative resistor. Because the motor speed is high, the regenerative energy cannot be absorbed in a predetermined deceleration time.	1) The power supply module checks the operation pattern of all motors connected to the driver module that supplies power, and reduces the load. Decrease the deceleration time. Reduce the motor speed. Change to a regenerative resistor with high regenerative processing capability. Increased power supply module capacity.
		2) The regenerative overload protection function limits the operating limit of the external resistor to 10% duty.	2) Set PSM Pr.00 "Regenerative operation setting" to 2 (An external resistor is used, but regenerative overload protection is not executed)
	Note When setting PSM Pr.00 "Regenerative operation setting" to 2, be sure to install external protection such as a thermal fuse. The regenerative resistor and transistor may not be protected, and the regenerative resistor and transistor may overheat and burn out. MINAS A6 Multi cannot be used for continuous regenerative braking.		
08	PSM regenerative transistor alarm	Failure of the regenerative drive transistor of the power supply module.	Replace the power supply module.
09	PSM regenerative resistor monitoring alarm	The regenerative resistor overheat protection input (DIN2/COM2) of the power supply module has become an abnormal side.	Take measures to make the regenerative resistor overheat protection input (DIN2/COM2) normal.
		1) The regenerative resistance temperature has reached the overheat protection level.	1) Change to a regenerative resistor with high regenerative processing capability.
		2) Regenerative resistor overheat protection input (DIN2/COM2) is disconnected.	2) Check the wiring between the regenerative resistor and the power supply module.
		3) Incorrect logic setting of regenerative resistor overheat protection input (DIN2/COM2).	3) Change bit1 "DIN2 logic setting" of PSM Pr.05 "Regenerative resistance temperature monitoring setting".
		4) Power supply module failure: Related circuit is broken.	4) Replace the power supply module.

(To be continued)

PSM alarm number	PSM alarm name	Cause of alarm	Measures of alarm
10	PSM heat sink overheat alarm	The radiator temperature of the power supply module exceeded the specified value.	Reduce the temperature of the power supply module.
		1) The ambient temperature of the power supply module exceeds the specified value.	1) Improve the power supply module ambient temperature and cooling conditions.
		2) Use in overload.	2) Check the operation pattern of all motors connected to the driver module that supplies power from the power supply module. Set a longer acceleration/deceleration time. Distribute the acceleration of each motor over time. Reduce the load. Increased power supply module capacity.
		3) Power supply module failure: Failure of temperature detection circuit.	3) Replace the power supply module.
11	PSM heat sink thermal alarm	The heat sink thermal that detects the radiator temperature of the power supply module failed.	Turn off the power and then turn it on again. If the alarm still occurs, there is a possibility of failure of temperature detection circuit. Discontinue use and replace the power supply module.
12	PSM overheat alarm	The ambient temperature of the power supply module exceeded the specified value.	Reduce the temperature of the power supply module.
		1) The ambient temperature of the power supply module exceeds the specified value.	1) Improve the power supply module ambient temperature and cooling conditions.
		2) Use in overload.	2) Check the operation pattern of all motors connected to the driver module that supplies power from the power supply module. Set a longer acceleration/deceleration time. Distribute the acceleration of each motor over time. Reduce the load.
		3) Power supply module failure: Failure of temperature detection circuit.	3) Replace the power supply module.
13	PSM thermal alarm	The ambient thermal that detects the radiator temperature of the power supply module failed.	Turn off the power and then turn it on again. If the alarm still occurs, there is a possibility of failure of temperature detection circuit. Discontinue use and replace the power supply module.
14	PSM contactor feedback alarm	The logic of the contactor control output (MC1, MC2) of the power supply module and the contactor feedback input (DIN1, COM1) do not match.	Match the logic of the contactor control output and the contactor feedback input.
		1) External magnetic contactor failure.	1) Try replacing the external magnetic contactor.
		2) There is a problem with the wiring between the external magnetic contactor and the power module input / output connector.	2) Check the wiring between the external contactor and the power supply module.
		3) Incorrect logic setting of control output (MC1, MC2) and feedback input (DIN1, COM1).	3) Change bit1 "DIN1 logic setting" of PSM Pr.04 "Contactor feedback monitoring setting"
		4) Power supply module failure: Related circuit is broken.	4) Replace the power supply module.

(To be continued)

PSM alarm number	PSM alarm name	Cause of alarm	Measures of alarm
15	PSM main power current detection circuit alarm	An abnormality was detected in the current detection value of the main power supply DC bus of the power supply module at the timing of transition from the main power supply cutoff state to the main power supply established state.	Turn off the power and then turn it on again. Confirmation of regenerative resistor wiring and resistance value. If the alarm still occurs, there is a possibility of failure of temperature detection circuit. Discontinue use and replace the power supply module.
16	PSM regenerative transistor short circuit alarm	An overload abnormality of the regenerative drive circuit was detected.	
17	PSM self check alarm	When initializing the power supply module, an abnormality was detected by self-diagnosis of the microcomputer.	
18	PSM EEPROM check alarm 1	An error was detected in the EEPROM of the power supply module.	Save the power supply module parameters to EEPROM and turn on the control power again. If the alarm still occurs with the display, there is a possibility of failure. Discontinue use and replace the power supply module.
19	PSM EEPROM check alarm 2		
20	PSM EEPROM check alarm 3		
21	PSM EEPROM check alarm 4		
22	PSM detection of excess number of connected driver module alarm	After starting the power supply module, more than maximum number of connections driver modules were detected by inter-module communication during the search for driver module period.	Reduce the number of driver modules to maximum number of connections or less. Refer to For maximum number of connections, refer to "REFERENCE SPECIFICATIONS Power supply module section (SX-DSV03452)".
23	PSM inter-module communication timeout alarm	Replies to driver modules connected via inter-module communication were not received more than the specified number of times.	Check the normal operation of the inter-module communication circuit / communication cable and interconnected power supply module / driver module.
		1) The communication cable between modules is disconnected.	1) Check the wiring of the inter-module communication cable.
		2) When the control power supply was shut down, the power supply module was still operating, and only a part of the driver modules were reset, and the control power supply was turned on again.	2) After confirming that the power supply module and all the driver modules are in the power-off state, turn on the control power.
		3) Inter-module communication of some driver modules has become abnormal.	3) Check that all driver modules are operating properly.
		4) Power supply module failure: Related circuit is broken.	4) Replace the power supply module.
24	PSM inter-module communication CRC alarm	A CRC error was continuously detected more than the specified number of times in the response data from the driver module connected by inter-module communication.	Implement noise countermeasures. • Correctly ground the power supply module and driver module. • Insert a noise filter and surge absorber into the power line. • Install a signal noise filter on each cable, input / output line, and power line connected to the power supply module and driver module.

PSM alarm number	PSM alarm name	Cause of alarm	Measures of alarm
26	PSM inter-module communication ID setting alarm	After starting the power supply module, the driver module set with inter-module communication node address (ID) = 1 was not found during the the search for driver module period.	Check that the inter-module communication node address (ID) setting DIP switch on the driver module front panel is set correctly.
27	PSM main power supply overload alarm	The overload load factor calculated from current of the PSM main power supply exceeded the specified value. (Note 1)	・Check the overload load factor of the PSM main power supply with PANATERM for Multi. ・Reduce the number of connected driver modules ・Replace with a power supply module with a large output.
		1) The total output of all motors of the driver module connected to the power supply module is excessive	
		2) Short circuit of main power supply DC bus.	
		▼ Refer to The PSM main power supply overload protection time characteristics are described on the end of this section.	

(Note 1) Supported in a software version of function expansion edition 1 or later.

PSM main power supply overload protection time characteristics

[Common to A-frame and B-frame]

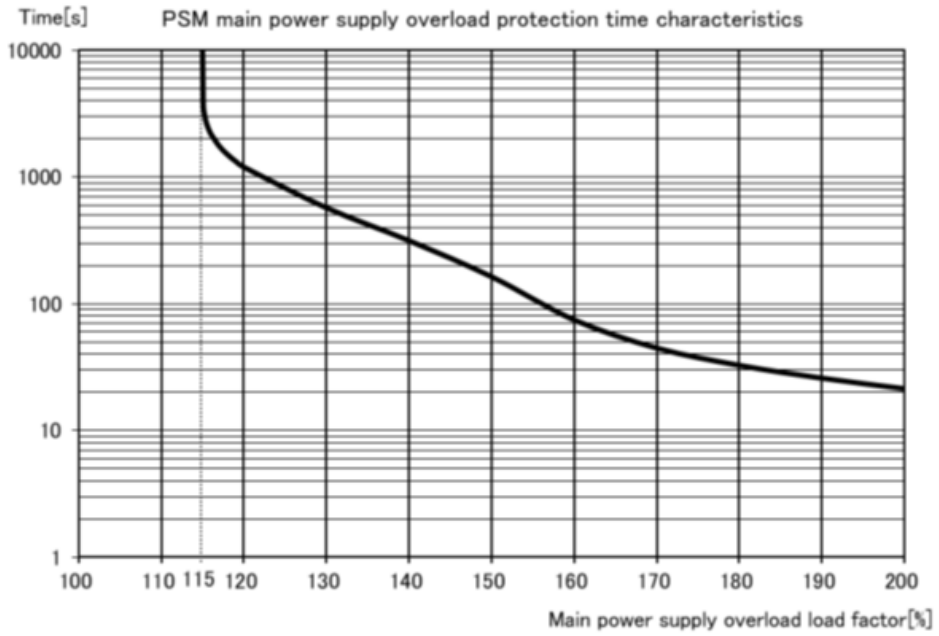

11.5.3 Warning functions

The PSM warning factors detected by the power supply module are shown below.

(1) Power supply module side
The power supply module warning (PSM warning) shown in the table below is detected.
During PSM warning, the ERR status lamp (red) on the front panel flashes.
For the PSM warning, refer to the operation manual of the setup support software PANATERM for Multi.

(2) Driver module side
The DM warning shown in the table below is detected on all axes of all driver modules connected to the power supply module by inter-module communication.

Warning number		Warning name	Cause of warning	Warning mask
PSM (Decimal)	DM (Hexadecimal) (Note 4)			PSM Pr.7
01	C3	PSM main power off warning	When the power supply module parameter PSM Pr.03 (Main power off warning detection time) is between 10 and 1999, the main power supply stopped instantaneously for more than the set time.	PSM Pr.7 Bit0 (Note 2)
02	A1	PSM regeneration overload warning	Regenerative load ratio exceeded 85% of protection level.	PSM Pr.7 Bit1 (Note 2)
03	AD	PSM fan lock warning	The fan built in the power supply module has stopped for 1 second or longer.	PSM Pr.7 Bit2 (Note 2)
04	AE	PSM main power supply overload warning	Main power supply load factor exceeds warning threshold.(Note 1)	PSM Pr.7 Bit3 (Note 2)
05	AF	PSM rated output power overload warning	The sum of the rated output power of the DMs connected to the PSM exceeds the rated output power of the PSM. (Note 1) (Note 2) (Note 3)	PSM Pr.7 Bit4 (Note 2)

(Note 1) About 15 seconds after the control power is turned on, detection of PSM rated output power overload is completed.
(Note 2) Supported in a software version of function expansion edition 1 or later.
(Note 3) This warning can be detected when the software version of PSM and the software version of all DMs connected to the PSM are function expansion edition 1 or later.
(Note 4) When PSM warning is masked by PSM Pr.07, DM warning corresponding to the masked PSM warning does not occur either.
Example) If PSM warning 01 is masked, DM warning C3 also does not occur.

Relevant parameters

■ **Relevant parameters**

PSM Pr.	Name	Setting range	Shipping setting	Unit	Content
03	Main power off warning detection time	0 to 2000	0	ms	Sets the main power off warning detection time. The main power off warning is not detected when the setting value is smaller than 10 or is set to 2000.
07	PSM alarm mask setting	-32768 to 32767	0	-	Set the warning detection mask. To disable detection of a warning, place 1 to the corresponding bit. (Note 5)

(Note 5) Supported in a software version of function expansion edition 1 or later.

11.6 List of power supply module parameters

The list of the power supply module parameters (PSM parameter) is shown in the table below.

Power supply module parameters are designated as "PSM Pr.nn" (nn is the number shown in the table below) in order to distinguish them from driver module parameters.

To edit any power supply module parameters, refer to the operation manual of the setup support software PANATERM for Multi.

<table>
<tr><th>PSM Pr.</th><th>Name</th><th>Setting range</th><th>Shipping setting</th><th>Unit</th><th>Content</th></tr>
<tr><td>00</td><td>Regenerative operation setup</td><td>0 to 3</td><td>1</td><td>-</td><td>Sets up the regeneration operation.
0: To be used by the manufacturer (do not set up the value)
1: An external resistor is used to execute regenerative overload protection.
2: An external resistor is used, but regenerative overload protection is not executed.
3: Driver is used without regenerative resistor, and regenerative overload protection is not executed.</td></tr>
<tr><td>01</td><td>Regenerative resistor load factor selection</td><td>0 to 4</td><td>0</td><td>-</td><td>Selects the operation method for the regenerative resistor load factor when an external regenerative resistor is selected (PSM Pr.00 = 1, 2).
0: Regenerative overload protection is detected with the regenerative resistor operation rate of 10%.
1 to 4: To be used by the manufacturer (do not set up the values)</td></tr>
<tr><td>02</td><td>Main power off detection time</td><td>0 to 2000</td><td>70</td><td>ms</td><td>Sets up the main power off detection time.
Main power off is not detected if the setting value is set smaller than 20 or is set to 2000.</td></tr>
<tr><td>03</td><td>Main power off warning detection time</td><td>0 to 2000</td><td>0</td><td>ms</td><td>Sets the main power off warning detection time.
The main power off warning is not detected when the setting value is smaller than 10 or is set to 2000.</td></tr>
<tr><td>04</td><td>Contactor feedback monitoring setting</td><td>-32768 to 32767</td><td>0</td><td>-</td><td>Sets up the function setting for each bit.
<table>
<tr><th>bit</th><th>Content</th><th>Logic</th></tr>
<tr><td>0</td><td>Monitoring function</td><td>0: Enable
1: Disable</td></tr>
<tr><td>1</td><td>DIN1 logical setup</td><td>With the contactor output MC1/MC2 relay short-circuited (contactor operating state, main power-on state)
0: Generates PSM Err.14 (PSM contactor error protection) when DIN1-COM1 terminals are open
1: Generates PSM Err.14 (PSM contactor error protection) when a Vdc (12-24 [V]) voltage is applied across the DIN1-COM1 terminals.
When the relay between MC1/MC2 is open, PSM Err.14 is detected in the reverse logic.</td></tr>
<tr><td>2-15</td><td>Not use</td><td>-</td></tr>
</table></td></tr>
<tr><td>05</td><td>Regenerative resistance temperature monitoring setting</td><td>-32768 to 32767</td><td>2</td><td>-</td><td>Sets up the function setting for each bit.
<table>
<tr><th>bit</th><th>Content</th><th>Logic</th></tr>
<tr><td>0</td><td>Monitoring function</td><td>0: Enable
1: Disable</td></tr>
<tr><td>1</td><td>DIN2 logical setup</td><td>0: Generates PSM Err.09 (PSM regenerative resistance monitoring protection) when a Vdc (12-24 [V]) voltage is applied between the DIN2 and COM2 terminals.
1: Generates PSM Err.09 (PSM regenerative resistance monitoring protection) when DIN2-COM2 terminals are open.</td></tr>
<tr><td>2-15</td><td>Not use</td><td>-</td></tr>
</table></td></tr>
<tr><td>06</td><td>Main power supply overload level</td><td>0 to 500</td><td>0</td><td>%</td><td>Sets the PSM mains power supply overload level.
When the setting value is 0, the overload level becomes 115%.
The setup value of this parameter is limited by 115%.
(Note 1)</td></tr>
<tr><td>07</td><td>PSM alarm mask setting</td><td>-32768 to 32767</td><td>0</td><td>-</td><td>Set up the alarm detection mask.
Placing 1 to the corresponding bit position disables detection of the alarm condition. (Note 1)</td></tr>
</table>

(Note 1) Supported in a software version of function expansion edition 1 or later